Motor Vehicle Registration Centre
Helsinki, Finland

Date 15.9.1992

Dnr L 127/92

IA

E 17

02352

COMMUNICATION

concerning: APPROVAL GRANTED
~~XXXXXXXXXXXXXXXXXXXX~~
~~XXXXXXXXXXXXXXXXXXXX~~
~~XXXXXXXXXXXXXXXXXXXX~~
~~XXXXXXXXXXXXXXXXXXXXXXXXXXXXXXXXXXXXXXXXXXXXXXXXXXXXXXXXXXXX~~

of a type of retroreflecting device pursuant to Regulation No. 3

Approval No. **02352** Extension No. **II**

1. Trade name or mark of the device: TALMU 12 6801-100/110/170
   12 6801-200/210
   12 6801-300/320/370

2. Manufacturer´s name for the type of device: Reflex reflector class IA

3. Manufacturer´s name and address: OY TALMU AB
   SF-24100 Salo, Finland

4. If applicable, name and address of the manufacturer´s representative: -

5. Submitted for approval on: 9.9.1992

6. Technical service responsible for conducting approval tests: Valtion teknillinen tutkimuskeskus, sähkö- ja automaatiotekniikan laboratorio (State Technical Research Centre, Electro- and Automation-technical Laboratory)

7. Date of test report: 21.3.1984, 22.1.1982, 14.8.1992

8. Number of test report: SÄH 4227, SÄH 252, SÄH 389/92

9. Concise description:

   In isolation/~~XXXXXXXXXXXXXXXXXXXXXXXXXXXXXXXXXXXXXXXXXXXXXXXXXXXXXXXXXXXX~~

   Colour of light emitted: White/red/amber

Post address
PL 22
00131 HELSINKI, Finland

Address
Ludviginkatu 3 - 5 A
HELSINKI

Phone
(90) 17201
int. +358-0-17201

Fax
(90) 1720390

10. Position of the approval mark: On the lens
See drawing No. 012 720-00

11. Reason(s) for extension (if applicable): Amendment 02

12. Approval: Granted/~~XXXXXXXX~~
~~XXXXXXXXXXXXXXXXXXXXXXXX~~

13. Place: Helsinki

14. Date: 15.9.1992

15. Signature:

Matti Ojala
Chief of Technical Office

16. The following documents, bearing the approval number shown above, are available on request:

Test reports No. SÄH 4227
SÄH 252
SÄH 389/92
Drawing No. 012 720-00

Post address	Address	Phone	Fax
PL 22	Ludviginkatu 3 - 5 A	(90) 17201	(90) 1720390
00131 HELSINKI, Finland	HELSINKI	int. +358-0-17201	

IA

E 17

02352

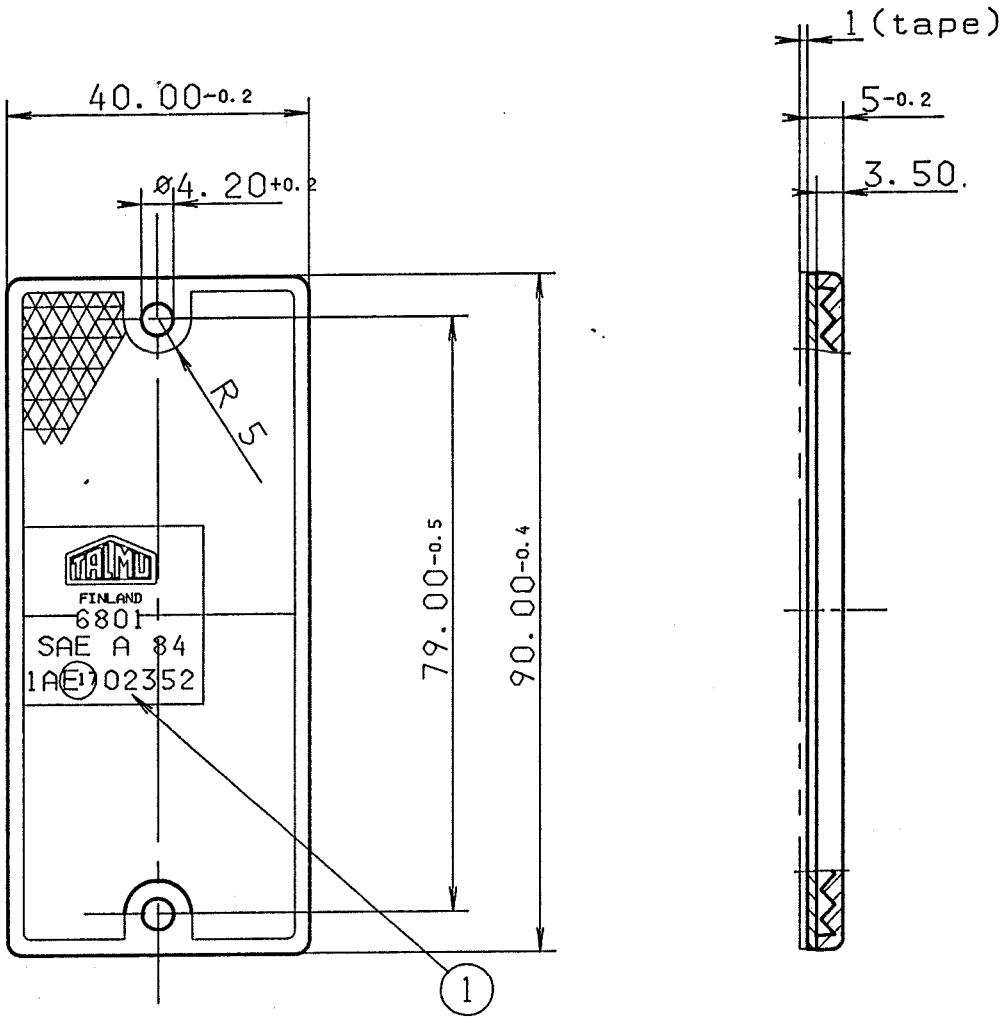

Product number:	12 6801-100	, colour:	red	without tape
" "	12 6801-110	"	red	with tape
" "	12 6801-170	"	red	with tape
" "	12 6801-200	"	clear	without tape
" "	12 6801-210	"	clear	with tape
" "	12 6801-300	"	amber	without tape
" "	12 6801-320	"	amber	with tape
" "	12 6801-370	"	amber	with tape

Replace drw. no. 4-10793 and product no:s 133 000, 133 003 and 133 004

Mark	Change	Koord.	Date	Changed by
1	changed approval number	.	17.6.92	EHa

Tol. DIN 16901	Repl. 4-10793	Repl. by .
Drawn by 30.8.91 EHa Exam. by 17.6.92 JB. Appr. by .	Filename 012720-00 6801HY.EHA	OY TALMU AB
Scale 1:1 Weight .	Belongs .	Drawing No . / DIN-A .
ISO-E	Description REFLEX REFLECTOR 6801 Talmu	Drawing No 012 720-00 / DIN-A 4