KLANN®
Spezial-Werkzeugbau GmbH

Wheel Bearing Tool

en

KL-0039-..Series

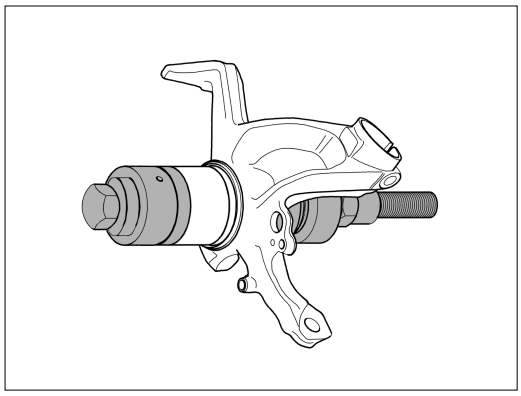

0039-Radlagere110609.doc

KLANN-Spezial-Werkzeugbau-GmbH

Breslauer Strasse 41
78166 Donaueschingen

Postfach 1329
78154 Donaueschingen - GERMANY

Tel.: +49 (0) 771 / 8 32 23-0
Fax: +49 (0) 771 / 8 32 23-90

E-Mail: info@klann-online.de
Internet: www.klann-online.de

GEDORE

KLANN UK

KLANN Tools Ltd.
Marton Street

BD23 1TF
Skipton, North Yorkshire
UNITED KINGDOM

Phone: +44 (0) 1756-706700
Fax: +44 (0) 1756-798083

E-Mail: sales@klanntools.co.uk
Internet: www.klanntools.co.uk

KLANN France

GEDORE-KLANN FRANCE SARL
10, rue du Bois du Pont – Bâtiment 6

Parc d'activités des Béthunes
BP 79144 - Saint-Ouen-L'Aumône
95074 CERGY PONTOISE CEDEX
FRANCE

Tél: +33 (0) 1.34.40.16.60
Fax: +33 (0) 1.34.40.16.61

E-Mail: info-klann@gedore.fr
Internet: www.gedore.fr

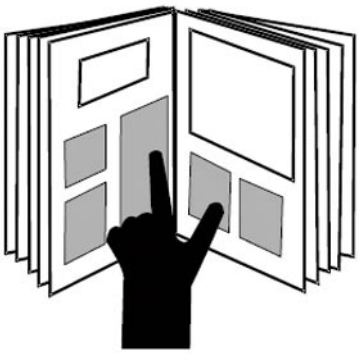

English en 3 - 23

© 2011 KLANN-Spezial-Werkzeugbau-GmbH, Germany

Contents en

1. Essential Safety Notices 4
   - 1.1 Safety Notices and Warnings 4
   - 1.2 Personal Protective Equipment 5
   - 1.3 Intended Use 5
   - 1.4 Safe and Proper Use 5
   - 1.5 Work Environment 5
   - 1.6 Appropriate Users 5

2. Product Description KL-0039-..Series Wheel Bearing Tool 6
   - 2.1 Mechanical Drive 6
   - 2.2 Hydraulic Drive 6
   - 2.3 Supporting-, Pressure-, and Centring Parts 7

3. Preparatory Work 8
   - 3.1 Checking the Delivery 8
   - 3.2 Securing the Tool against Falling 8
   - 3.3 Preparing the Vehicle 8
   - 3.4 Lift vehicle and loosen and/or remove all necessary components 8
   - 3.5 Wheel Hub Removal 8

4. Wheel Bearing Removal 8
   - 4.1 Determination of Tool Components 8
   - 4.2 Removing a Wheel Bearing by means of the Mechanical Drive 9
   - 4.3 Removing a Wheel Bearing by means of the Hydraulic Drive 10

5. Wheel Bearing Installation 11
   - 5.1 Determination of Tool Components 11
   - 5.2 Installing a wheel bearing by means of the mechanical drive 11
   - 5.3 Installing a wheel bearing by means of the Hydraulic Drive 12

6. Wheel Hub Installation 13
   - 6.1 Determination of Tool Components 13
   - 6.2 Installing a Wheel Hub by means of the Mechanical Drive 13
   - 6.3 Installing a Wheel Hub by means of the Hydraulic Drive 14

7. Care and Storage 15

8. Accessories 15

9. Maintenance and Repair by the KLANN Service Centre 15

10. Components List 16

© 2011 KLANN-Spezial-Werkzeugbau-GmbH, Germany

1. Essential Safety Notices

⚠ Before using the Wheel Bearing Tool, it is imperative to read and understand the instruction manual. Misuse can lead to SERIOUS or FATAL INJURIES.
This instruction manual is part of the Wheel Bearing Tool. Store the instruction manual in a safe place for any further use and give it to subsequent users of the Wheel Bearing Tool.

1.1 Safety Notices and Warnings

For better differentiation, the warning notices in this instruction manual are classified as follows:

Warning sign	Sign reads	Meaning
⚠	**DANGER**	Indicates a hazardous situation which, if not avoided, may result in **serious** or **fatal injuries**.
⚠	**CAUTION**	Indicates a hazardous situation which, if not avoided, may result in moderate or minor injuries.
	ATTENTION	Indicates a situation which, if not avoided, may result in possible damage to the wheel bearing tool or its functioning, or to objects in its vicinity.

⚠ **DANGER**

When removing and installing wheel bearings, as well as when installing wheel hubs by means of a hydraulic drive, there is the risk that the pull spindle could break and fall to pieces. This will lead to parts or the pull spindle becoming projectiles.

- Observe and do not exceed the maximum load capacity of the pull spindle.
- Use hydraulic pump with pressure gauge **KL-0040-2529**.
- Only use Original KLANN spare parts.
- Always keep all parts of your body away from the axial extension of the pull spindle.

⚠ **DANGER**

When removing and installing wheel bearings, as well as when installing wheel hubs by means of a mechanical drive, there is the risk that the pull spindle could break and fall to pieces. This will lead to parts or the pull spindle becoming projectiles.

- Observe and do not exceed the maximum load capacity of the pull spindle.
- Only use Original KLANN spare parts.
- Always keep all parts of your body away from the axial extension of the pull spindle.

⚠ **CAUTION**

A falling tool can cause injuries.

- Always wear safety shoes / boots.
- Mechanical drive: Secure the tool by means of safety belt **KL-0040-2590** and adaptor **KL-0040-2591** (accessories) against falling.
- Hydraulic drive: Secure the tool by means of safety belt **KL-0040-2590** (accessories) against falling.

ATTENTION

Risk of damage to the pull spindle.

- Lubricate pull spindle with molybdenum disulphide paste **KL-0014-0030**.

© 2011 KLANN-Spezial-Werkzeugbau-GmbH, Germany

1.2 Personal Protective Equipment

ALWAYS wear personal protective equipment when using the wheel bearing tool. The wheel bearing tool can cause mechanical hazards which could result in serious injuries such as contusions, cuts and concussions.

EYE PROTECTION (see OSHA 29 CFR 1910.133 and ANSI Z87) designed to protect you from flying objects must be worn when using the wheel bearing tool.

- Particles may be ejected at high speed while working with the wheel bearing tool and could cause serious injuries to your eyes.

SAFETY GLOVES must be worn when using the wheel bearing tool.

- Working with the wheel bearing tool can cause skin abrasions and contusions.

SAFETY SHOES/BOOTS with slip resistant soles and steel-toe caps (see OSHA 29 CFR 1910.136 and ANSI 241) must be worn when using the wheel bearing tool.

- Falling parts can cause serious injuries to feet and toes.

1.3 Intended Use

The wheel bearing tool must only be used for removing and installing wheel bearings, and for installing wheel hubs.

The wheel bearing tool may only be used according to the directions and provisions specified in the instruction manual.

- Any other use can result in severe injuries or even death.

1.4 Safe and Proper Use

Take the following safety precautions to prevent injuries and damage that could be caused by improper handling or unsafe use of the wheel bearing tool.

Misuse can result in extremely severe injuries or even death.

- NEVER exceed the load capacity of the wheel bearing tool.
- NEVER attempt to drive both clamping nut and spindle at the same time. (Risk of pull spindle overload)
- Do not use an impact wrench or any extensions!
- Damaged or worn parts MUST be replaced prior to use.
- ONLY use KLANN Original replacement and accessory parts for the wheel bearing tool.

1.5 Work Environment

Work with the wheel bearing tool should only be carried out in a safe work environment.

- The workplace must always be clean and tidy.
- The workplace must be sufficiently large and secured.

1.6 Appropriate Users

This instruction manual is designed for technicians in workshops.
DO NOT allow children to use the wheel bearing tool.
Purchasers / employers purchasing the wheel bearing tool MUST ensure that any person / employee using the wheel bearing tool have read and understood this instruction manual prior to using the tool.

© 2011 KLANN-Spezial-Werkzeugbau-GmbH, Germany

Fig. 1: **KL-0040-3008 Pull Spindle M20**

Fig. 2: **KL-0039-2030 Pull Spindle M20**

Fig. 3: **KL-0040-3009 Clamping Nut M20**

Fig. 4: **KL-0039-1011 Retainer Adaptor for mechanical spindle**

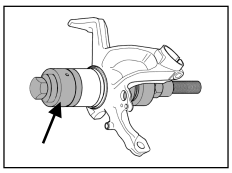

Fig. 5: **KL-0039-1002 Retainer Adaptor for clamping nut and pressure spindle**

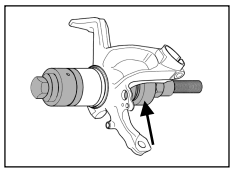

Fig. 6: **KL-0040-2500 Hydraulic Cylinder**

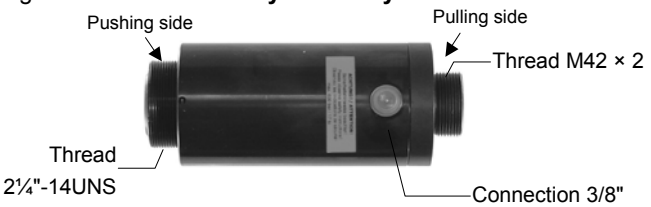

Fig. 7: **KL-0039-1920 Pull Spindle with clamping nut M20**

Fig. 8: **KL-0039-1003 Retainer Adaptor for hydraulic cylinder**

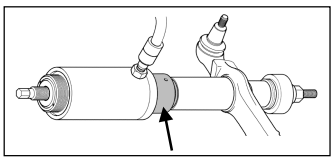

Fig. 9: **KL-0039-1002 Retainer Adaptor for clamping nut and pressure spindle**

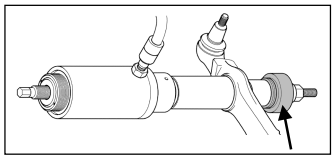

2. Product Description: KL-0039-..Series Wheel Bearing Tool

2.1 Mechanical Drive

KL-0040-3008 Pull Spindle M20

Overall length: ..... 290 mm
Drive: ..... (waf) 19 mm
Max. load: ..... 20 t

KL-0039-2030 Pull Spindle M20

Overall length: ..... 420 mm
Drive: ..... (waf) 19 mm
Max. load: ..... 20 t

KL-0040-3009 Clamping Nut M20

Overall length: ..... 50 mm
Drive: ..... (waf) 30 mm

KL-0039-1011 Retainer Adaptor for Mechanical Spindle

This tool is necessary to retain the various **KL-0039-..** or **KL-0043-..** press/support sleeves if these are to be inserted by using the mechanical drive.
The built-in ball bearing allows for accurate and professional working, even under intensive load.

KL-0039-1002 Retainer Adaptor for Clamping Nut and Pressure Spindle

This adaptor is designed to retain the various pressure-/support sleeves of the **KL-0039-.. or KL-0043-..Series**.
Locating-Ø for clamping nut or pressure spindle: ..... 20 mm

2.2 Hydraulic Drive

KL-0040-2500 Hydraulic Cylinder

Due to its special design as a tubular piston cylinder and the possibility to be used in conjunction with various spindles, the hydraulic cylinder **KL-0040-2500** is suitable for pulling and pushing operations.

Note: Hydraulic pump **KL-0215-35 M25** (accessory) is required to drive the hydraulic cylinder.

KL-0039-1920 Pull Spindle M20 with Clamping Nut

Overall length: ..... 590 mm
Working travel: ..... 390 mm
Max. load: ..... 20 t

KL-0039-1003 Retainer Adaptor for Hydraulic cylinder

This tool is necessary to retain the various **KL-0039-..** or **KL-0043-..** pressure-/support sleeves if these are to be inserted by using the hydraulic cylinder **KL-0040-2500**. (Connecting thread: M42 x 2)

KL-0039-1002 Retainer Adaptor for Clamping Nut and Pressure Spindle

This adaptor is designed to retain the various pressure-/support sleeves of the **KL-0039-.. or KL-0043-..Series**.
Locating-Ø for clamping nut or pressure spindle: ..... 20 mm

© 2011 KLANN-Spezial-Werkzeugbau-GmbH, Germany

Fig. 10: **KL-0039-14.. Centring Rings for Housing**

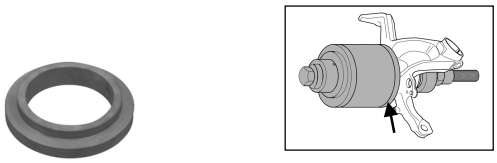

Fig. 11: **KL-0039-1402 Housing**

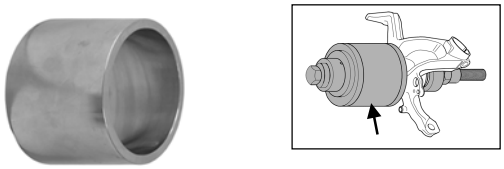

Fig. 12: **KL-0039-1401 Bearing Cover**

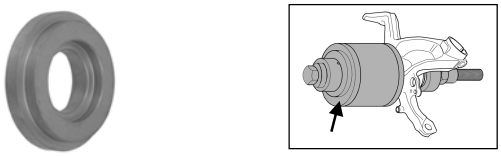

Fig. 13: **KL-0039-12.. Pressure Rings**

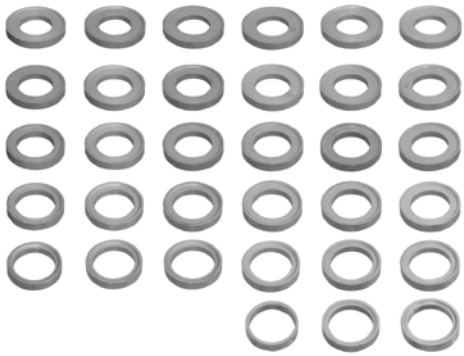

Fig. 14: **KL-0039-13.. Centring Rings**

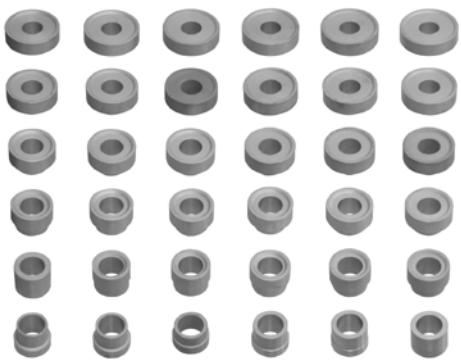

2.3 Supporting-, Pressure-, and Centring Parts

Support

KL-0039-14.. Centring Rings for Housing

Designed to support the housing of the wheel bearing tool on the wheel bearing housing.

Part No.	Inner-Ø
KL-0039-1413	Ø70 mm
KL-0039-1414	Ø75 mm
KL-0039-1415	Ø80 mm

KL-0039-1402 Housing

Suitable for bearing Ø of up to 90 mm.

KL-0039-1401 Bearing Cover

This tool enables centred power transmission from drive to housing.

Pressure Rings

KL-0039-12.. Pressure Rings

These rings allow for the accurate pressure force transmission to the outer bearing race or inner bearing race.

The pressure ring set **KL-0039-120** includes the dimensions from Ø54 mm up to Ø90 mm in 32 gradations.

Centring Rings

KL-0039-13.. Centring Rings

The centring rings ensure the accurate guiding of the wheel bearing throughout the removal and installation process.

The centring ring set **KL-0039-130** includes the dimensions from Ø25 mm up to Ø60 mm in 36 gradations.

© 2011 KLANN-Spezial-Werkzeugbau-GmbH, Germany

Fig. 15: **Securing the tool against falling.**

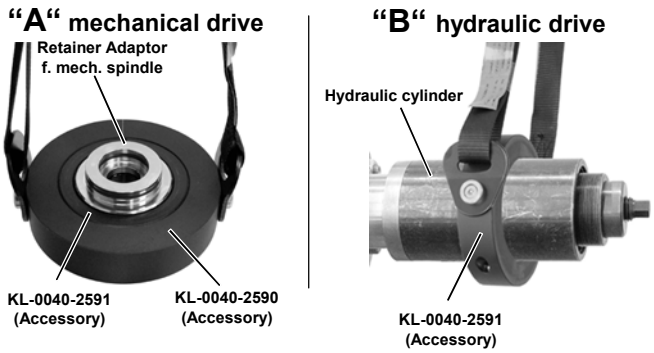

Fig. 16: **Identifying the dimensions: Wheel bearing removal**

"A"

Identifying the centring ring for wheel bearing housing

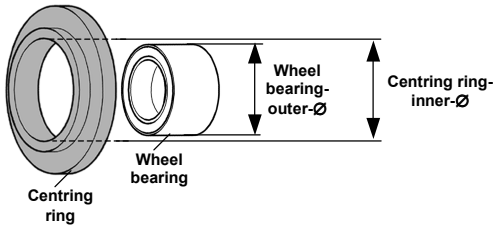

"B"

Identifying the pressure ring for wheel bearing

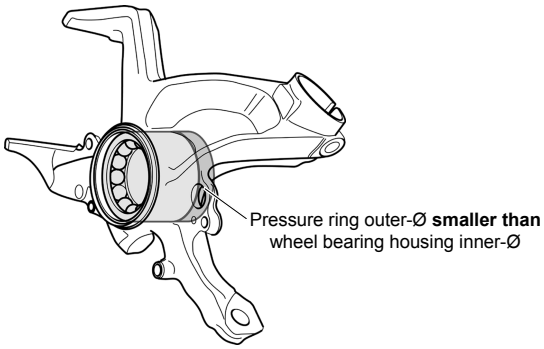

3. Preparatory Work

Before using the wheel bearing tool for the first time, check and confirm you have all parts listed in the scope of delivery. Then, follow the mounting instructions.

3.1 Checking the Delivery (see pages 16 - 23)

3.2 Securing the Tool against Falling.

Mechanical drive: Fasten safety belt **KL-0040-2590** (accessory) with adaptor **KL-00400-2591** (accessory) to retainer adaptor **KL-0039-1011**. **(Fig. 15 A)**

Hydraulic drive: Fasten safety belt **KL-0040-2590** (accessories) to hydraulic cylinder **KL-0040-2500**. **(Fig. 15 B)**

3.3 Preparing the Vehicle.

3.4 Lift vehicle and loosen and/or remove all necessary components.

3.5 Wheel Hub Removal

1. Remove the wheel hub either by means of wheel hub puller **KL-0041-380** (accessory) or by means of puller set **KL-0174-110** (accessory) in conjunction with slide hammer **KL-0049-31** (accessory).
2. Remove retaining rings.

4. Wheel Bearing Removal

These instructions describe how to identify the correct tool components, and how to remove a wheel bearing from the wheel bearing housing (by means of the mechanical **or** hydraulic drive).

4.1 Determination of Tool Components

1. **Centring ring for wheel bearing housing**

ATTENTION

Risk of damage to the centring ring for housing.

- The inner diameter of the centring ring should not be chosen too small as there is the risk that the dismounted wheel bearing could get stuck in the centring ring.

Identifying the correct centring ring.

⇒ For this, measure the outer-Ø of the wheel bearing. **(Fig. 16 A)**

The correct centring ring inner-Ø results from the wheel bearing outer-Ø **+** approx. 2 to 3 mm.

2. **Pressure ring for wheel bearing**

ATTENTION

Risk of damage to the pressure ring and wheel bearing housing.

- The pressure ring outer-Ø has to be smaller than the smallest inner-Ø of the wheel bearing locating bore, otherwise the pressure ring will be pressed into the wheel bearing housing.
  When removing a wheel bearing, be sure to use the flat side of the pressure ring.

Identifying the correct pressure ring.

⇒ Identify the correct pressure ring by trying. **(Fig. 16 B)**

© 2011 KLANN-Spezial-Werkzeugbau-GmbH, Germany

Fig. 17: **Wheel bearing removal (mechanical drive)**

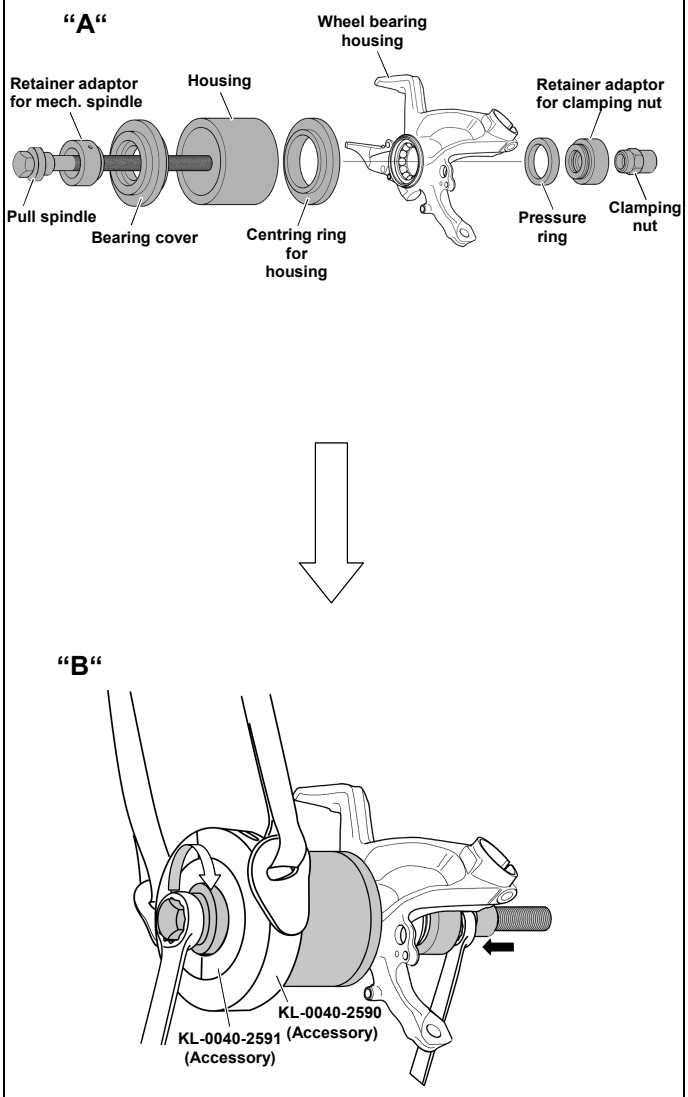

4.2 Removing a Wheel Bearing by means of the Mechanical Drive

1. ***ATTENTION***
   Risk of damage to the centring ring for housing.
   - Align the centring ring with the housing so that the dismounted wheel bearing can be inserted into the centring ring inner-Ø without risk of collision.
   - The contact surface of the centring ring must be even and parallel to the wheel bearing.
     Please note that the minimum contact surface consists of two points which are level with each other and displaced by 180°.

   Mount the tool using the tool components as determined under point **4.1** on the wheel bearing housing as shown in **Fig. 17 A**.

2. ⚠ **DANGER**
   When removing wheel bearings by means of the mechanical drive, there is the risk that the pull spindle could break and fall to pieces. This will lead to parts or the pull spindle becoming projectiles.
   - Observe and do not exceed the maximum load capacity of the pull spindle.
   - Only use Original KLANN spare parts.
   - Always keep all parts of your body away from the axial extension of the pull spindle.

   Remove the wheel bearing by turning the spindle by means of a spanner (size waf) 19 mm. **(Fig. 17 B)**
   Note: Lock the opposite clamping nut by means of a spanner (size waf) 30 mm.

3. Remove tool with the dismounted wheel bearing from the wheel bearing housing.

Fig. 18: **Wheel bearing removal (hydraulic drive)**

“A“

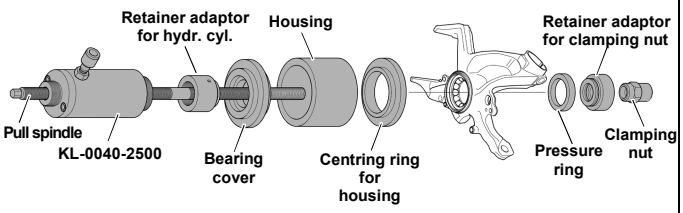

“B“

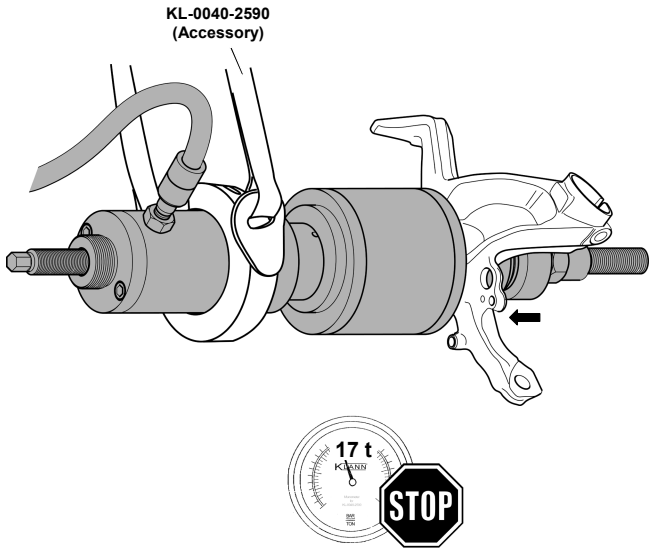

4.3 Removing a Wheel Bearing by means of the Hydraulic Drive

Note:
The hydraulic drive without hydraulic cylinder **KL-0039-802**, hydraulic cylinder **KL-0040-2500** and hydraulic hand pump **KL-0215-35 M25** will be required.

1. ***ATTENTION***
   Risk of damage to the centring ring for housing.
   - Align the centring ring with housing so that the extracted wheel bearing can be inserted into the centring ring inner-Ø without risk of collision.
   - The contact surface of the centring ring must be even and parallel to the wheel bearing.
     Please note that the minimum contact surface consists of two points which are level with each other and displaced by 180°.

   Mount the tool using the tool components as determined under point **4.1** on the wheel bearing housing as shown in Fig. 18 A.

2. Connect hydraulic cylinder to hydraulic pump (accessory).

3. **⚠ DANGER**
   When removing wheel bearings by means of hydraulic cylinder **KL-0040-2500** (accessory), there is the risk that the pull spindle could break and fall to pieces. This will lead to parts or the pull spindle becoming projectiles.
   - Observe and do not exceed the maximum load capacity of the pull spindle and hydraulic cylinder.
   - Use hydraulic pump with pressure gauge **KL-0040-2529**.
   - Only use Original KLANN spare parts.
   - Always keep all parts of your body away from the axial extension of the pull spindle.

   Operate hydraulic pump and remove wheel bearing. **(Fig. 18 B)** During the removal process, read the required force on the pressure gauge of the hydraulic pump.

4. Remove tool with the dismounted wheel bearing from the wheel bearing housing.

© 2011 KLANN-Spezial-Werkzeugbau-GmbH, Germany

Fig. 19: **Identifying the dimensions: Wheel bearing installation**

"A" Identifying the pressure ring for wheel bearing housing

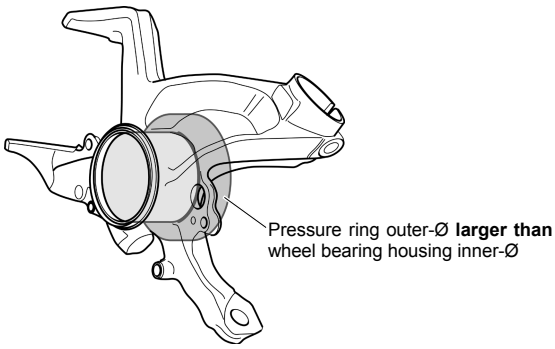

"B" Identifying the pressure ring for wheel bearing
(with bearing outer-Ø)

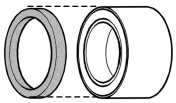

"C" Identifying the centring ring for wheel bearing
(with bearing inner-Ø)

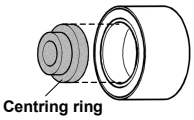

Fig. 20: **Wheel bearing installation (mechanical drive)**

"A"

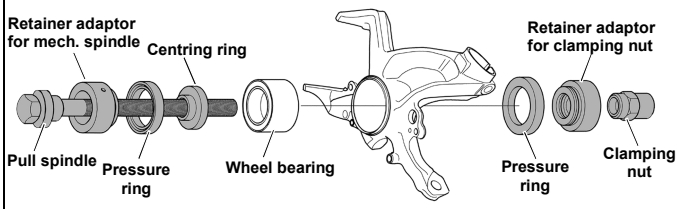

"B"

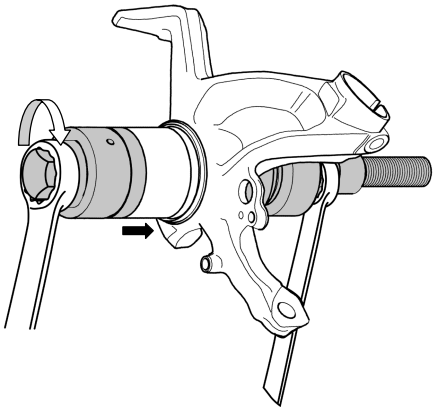

5. Wheel Bearing Installation

These instructions describe how to determine the correct tool components, and how to install a wheel bearing into the wheel bearing housing (using the mechanical **or** hydraulic drive).

5.1 Determination of Tool Components

1. **Pressure ring for wheel bearing housing**

   ATTENTION

   Risk of damage to the pressure ring and wheel bearing housing.

   - The contact surface of the pressure ring on the wheel bearing housing should be even and parallel to the opposite side of the wheel bearing housing.
     Please note that the minimum contact surface consists of two points which are level with each other and displaced by 180°.

   ⇒ The correct pressure ring for the wheel bearing housing results from the outer diameter of the pressure ring identified (used) for the removal of the wheel bearing plus approximately 4 mm. **(Fig. 19 A)**

2. **Pressure ring for wheel bearing**

   ATTENTION

   Risk of damage to the wheel bearing.

   - Be sure that the recessed side of the pressure ring is pressing accurately against the outer race of the wheel bearing.

   Identifying the correct pressure ring.
   ⇒ For this, measure the outer-Ø of the wheel bearing. **(Fig. 19 B)**
   The correct pressure ring results from the outer-Ø of the wheel bearing **-** 0.5 to 1.0 mm.

3. **Centring ring for wheel bearing**

   ATTENTION

   Risk of damage to the wheel bearing.

   - In no case must the centring ring exert any pressure on the inner-Ø of the wheel bearing.

   Identifying the correct centring ring.
   ⇒ For this, measure the inner-Ø of the wheel bearing. **(Fig. 19 C)**
   The correct centring ring results from the wheel bearing inner-Ø **-** 0.5 to 1.0 mm.

5.2 Installing a wheel bearing by means of the mechanical drive

1. Mount the tool components identified as per instructions **5.1** with the new wheel bearing on the wheel bearing housing as shown in **Fig. 20 A**.

2. **⚠ DANGER**

   When installing wheel bearings by means of the mechanical drive, there is the risk that the pull spindle could break and fall to pieces. This will lead to parts or the pull spindle becoming projectiles.

   - Observe and do not exceed the maximum load capacity of the pull spindle.
   - Only use Original KLANN spare parts.
   - Always keep all parts of your body away from the axial extension of the pull spindle.

   ATTENTION

   Risk of damage to the wheel bearing and wheel bearing housing.

   - If the wheel bearing tilts during installation, cancel installation process.

   Install the wheel bearing by turning the spindle by means of a spanner (size waf) 19 mm. **(Fig. 20 B)**
   Note: Lock the opposite clamping nut by means of a spanner (size waf) 30 mm.

3. Stop the installation process as soon as the wheel bearing has reached its correct position.
   Remove tool from wheel bearing housing.

© 2011 KLANN-Spezial-Werkzeugbau-GmbH, Germany

Fig. 21: **Wheel bearing installation (hydraulic drive)**

“A“

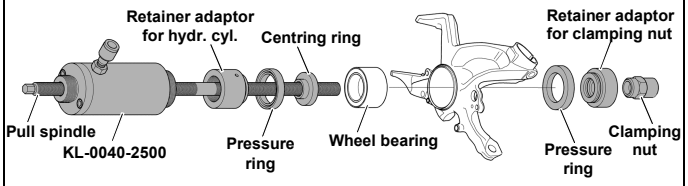

“B“

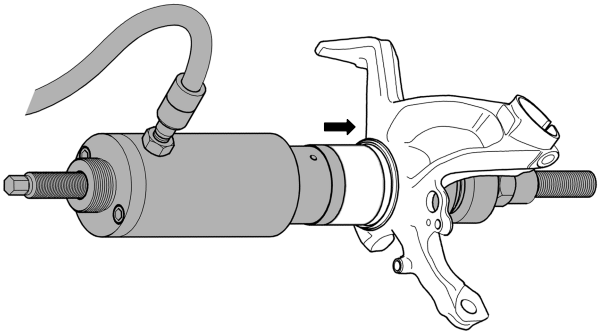

5.3 Installing a wheel bearing by means of the Hydraulic Drive

Note:
The hydraulic drive without hydraulic cylinder **KL-0039-802**, hydraulic cylinder **KL-0040-2500** and hydraulic hand pump **KL-0215-35 M25** are required.

1. Mount the tool components identified as per instructions **5.1** with the new wheel bearing on the wheel bearing housing as shown in **Fig. 21 A**.

2. Connect hydraulic cylinder to hydraulic pump (accessory).

3. **⚠ DANGER**

   When installing wheel bearings by means of the hydraulic cylinder **KL-0040-2500** (accessory), there is the risk that the pull spindle could break and fall to pieces. This will lead to parts or the pull spindle becoming projectiles.

   - Observe and do not exceed the maximum load capacity of the pull spindle and hydraulic cylinder.
   - Use hydraulic pump with pressure gauge **KL-0040-2529**.
   - Only use Original KLANN spare parts.
   - Always keep all parts of your body away from the axial extension of the pull spindle.

   ATTENTION

   Risk of damage to the wheel bearing and wheel bearing housing.

   - If the wheel bearing tilts during installation, cancel installation process.

   Operate hydraulic pump and install wheel bearing. **(Fig. 21 B)**
   During the installation process, read the required force on the pressure gauge of the hydraulic pump.

4. Stop the installation process as soon as the wheel bearing has reached its correct position.

5. Remove tool from wheel bearing housing.

© 2011 KLANN-Spezial-Werkzeugbau-GmbH, Germany

Fig. 22: **Identifying the dimensions: Wheel hub installation**

"A"

Identifying the pressure ring / centring ring for inner bearing race

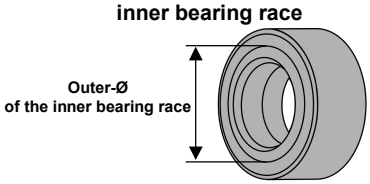

"B"

Identifying the pressure ring for wheel hub

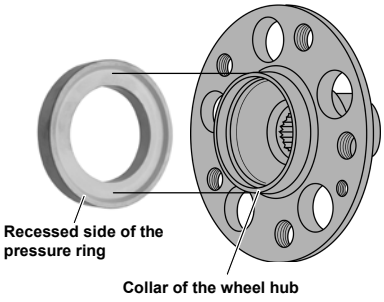

Fig. 23: **Wheel hub installation (mechanical drive)**

"A"

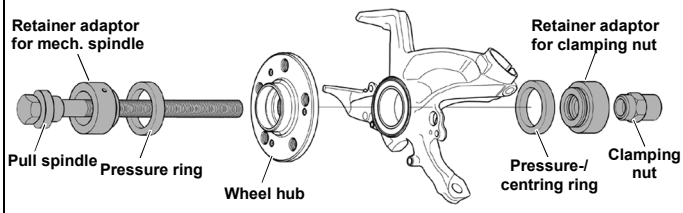

"B"

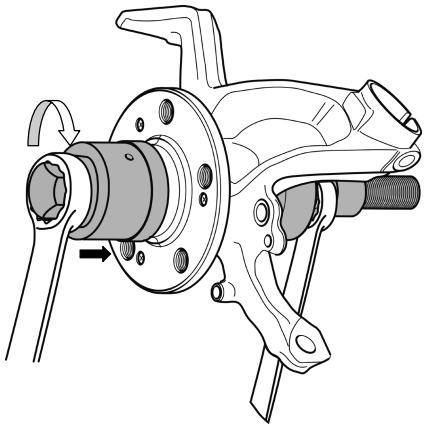

6. Wheel Hub Installation

These instructions describe how to determine the correct tool components, and how to install a wheel hub into the wheel bearing (using the mechanical **or** hydraulic drive).

6.1 Determination of Tool Components

1. **Pressure Ring / Centring Ring for Inner Bearing Race**

   ATTENTION

   Risk of damage to the wheel bearing.

   - Ensure that the outer diameter of the identified pressure ring / centring ring is pressing exactly against the inner race of the wheel bearing.
     When installing a wheel bearing, be sure to use the flat side of the pressure ring.

   ⇒ For this, measure the outer-Ø of the inner bearing race. **(Fig. 22 A)**
   The correct pressure ring / centring ring results from the inner bearing race outer-Ø **-** 0.5 to 1.0 mm.

2. **Pressure Ring for Wheel Hub**

   Identifying the correct pressure ring.

   ⇒ Identify the correct pressure ring by trying. Make sure that the edge of the recessed side of the pressure ring accurately grips around the collar of the wheel hub. **(Fig. 22 B)**

6.2 Installing a Wheel Hub by means of the Mechanical Drive

1. Mount the tool components identified as per instructions **6.1** with the wheel hub on the wheel bearing housing as shown in **Fig. 23 A**.

2. **⚠ DANGER**

   When installing wheel hubs by means of the mechanical drive, there is the risk that the pull spindle could break and fall to pieces. This will lead to parts or the pull spindle becoming projectiles.

   - Observe and do not exceed the maximum load capacity of the pull spindle.
   - Only use Original KLANN spare parts.
   - Always keep all parts of your body away from the axial extension of the pull spindle.

   Install the wheel hub by turning the spindle by means of a spanner (size waf) 19 mm. **(Fig. 23 B)**
   Note: Lock the opposite clamping nut by means of a spanner (size waf) 30 mm.

3. Stop the installation process as soon as the wheel hub has reached its correct position.

4. Remove tool from wheel bearing housing.

© 2011 KLANN-Spezial-Werkzeugbau-GmbH, Germany

Fig. 24: **Wheel hub Installation (hydraulic drive)**

“A“

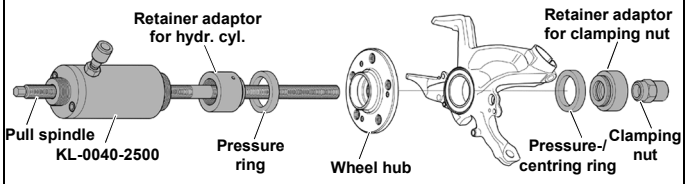

“B“

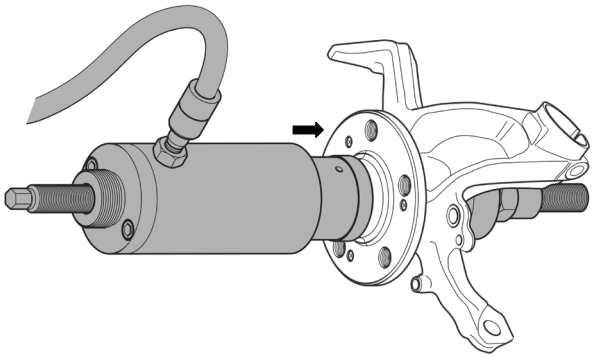

6.3 Installing a Wheel Hub by means of the Hydraulic Drive

Note:
The hydraulic drive without hydraulic cylinder **KL-0039-802**, hydraulic cylinder **KL-0040-2500** and hydraulic hand pump **KL-0215-35 M25** are required.

1. Mount the tool components identified as per instructions **6.1** with the wheel hub on the wheel bearing housing as shown in **Fig. 24 A**.

2. Connect hydraulic cylinder to hydraulic pump (accessory).

3. **⚠ DANGER**
   When installing wheel hubs by means of the hydraulic cylinder **KL-0040-2500** (accessory), there is the risk that the pull spindle could break and fall to pieces. This will lead to parts or the pull spindle becoming projectiles.
   - Observe and do not exceed the maximum load capacity of the pull spindle and hydraulic cylinder.
   - Use hydraulic pump with pressure gauge **KL-0040-2529**.
   - Only use Original KLANN spare parts.
   - Always keep all parts of your body away from the axial extension of the pull spindle.

   Operate hydraulic pump and install wheel hub. **(Fig. 24 B)** During the installation process, read the required force on the pressure gauge of the hydraulic pump.

4. Stop the installation process as soon as the wheel hub has reached its correct position.

5. Remove tool from wheel bearing housing.

© 2011 KLANN-Spezial-Werkzeugbau-GmbH, Germany

Fig. 25: **Accessory: KL-0215-35 M25**

Fig. 26: **Accessory: KL-0040-2590**

Fig. 27: **Accessory: KL-0040-2591**

Fig. 28: **Accessory: KL-0041-380**

Fig. 29: **Accessory: KL-0174-110**

Fig. 30: **Accessory: KL-0049-31**

7. Care and Storage

ATTENTION Petroleum ether and chemical solvents can damage plastic parts. Always clean all parts after their use with a clean cloth only.
In order to protect against corrosion, lightly lubricate all metal parts after their use and store them in a clean and dry place.

8. Accessories

KL-0215-35 M25 Hydraulic Hand Pump

The hydraulic hand pump **KL-0215-35 M25** is used to drive our pressing and pulling devices by means of the hydraulic cylinder **KL-0040-2500**.
Note: The hydraulic pressure and necessary force can be checked while operating the pump at pressure gauge KL-0040-2529 (supplied with the tool set). The pressure gauge features an additional tonne scale matched to our KL-0040-2500 hydraulic cylinder (17 t).

KL-0040-2590 Safety Belt

By fastening the safety belt **KL-0040-2590** to the vehicle and to the tool, the latter is prevented from falling.

KL-0040-2591 Adaptor for Safety Belt

The adaptor **KL-0040-2591** is designed to retain the retainer adaptor **KL-0039-1011** in the safety belt **KL-0040-2590**.

KL-0041-380 Wheel Hub Puller

The wheel hub puller **KL-0041-380** allows for the quick, safe and precise extraction of wheel hub bearing units or wheel hubs featuring a diameter of up to 250 mm. For this, the hydraulic cylinder **KL-0040-2500** and pull spindle **KL-0039-1920-1** are needed.

KL-0174-110 Puller Set

Designed to press out drive shafts mechanically.
Even glued, corroded or heavily seized drive shafts are no longer an issue by using the hydraulic cylinder 17t which is optionally available.

KL-0049-31 Slide Hammer Puller 4.8 kg

Designed to extract wheel hubs, half-shafts, universally jointed drive shafts and brake drums etc. The tool is used in conjunction with the **KL-0174- Puller Series**.

9. Maintenance and Repair by the KLANN Service Centre

For safety reasons, as soon as damage is noticed on the wheel bearing tool, immediate steps must be taken to prevent it from being used. For professional checking and repair of the tool, please contact the KLANN Service Centre.
Address:
KLANN Spezial-Werkzeugbau-GmbH
Breslauerstr. 41
78166 Donaueschingen
Tel.: 0771 83 22 371
E-Mail: service.de@klann-online.de
For additional information concerning the use of our wheel bearing tool, please contact the KLANN Service Centre.

© 2011 KLANN-Spezial-Werkzeugbau-GmbH, Germany

10. Components List

KL-0039-801 Mechanical Drive

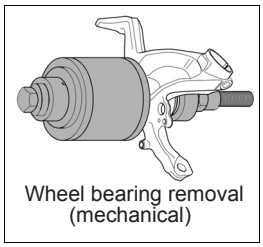
Wheel bearing removal (mechanical)

Required to mechanically operate the wheel bearing tools of the **KL-0039-... Series**.
The ball bearing and the integrated guide of the pull spindle and clamping nut in the adaptor enable professional and efficient working, even if the wheel bearings are seized in place.

Scope of Delivery:
KL-0039-801 Mechanical drive

Part No.	Description	Qty.
KL-0039-1002	Retainer adaptor for clamping nut and pressure spindle with O-ring	1
KL-0039-1011	Retainer adaptor for mecanical spindle	1
KL-0040-3008	Pull spindle	1
KL-0040-3009	Clamping nut	1

KL-0039-802 Hydraulic Drive without hydraulic cylinder

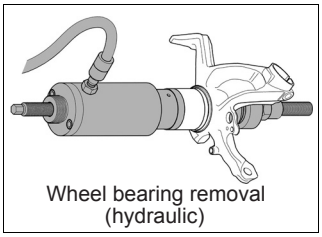
Wheel bearing removal (hydraulic)

This tool is necessary to hydraulically operate the wheel bearing tool sets **KL-0039-... Series** in conjunction with the 17 t hydraulic cylinder **KL-0040-2500** and a hydraulic pump such as **KL-0215-35 M25 or KL-0215-37 M25** if the wheel bearings are seized in place.
The special design of the two retainer adaptors enables the accurate and safe guiding and centring of the hydraulic cylinder and the clamping nut towards the wheel bearing tool.

Scope of Delivery:
KL-0039-802 Hydraulic Drive without hydraulic cylinder

Part No.	Description	Qty.
KL-0039-1002	Retainer adaptor for clamping nut and pressure spindle with O-ring	1
KL-0039-1003	Retainer adaptor for hydraulic cylinder with O-ring	1
KL-0039-1920	Pull spindle M20, with clamping nut	1

KL-0040-3008 Pull Spindle M20

Technical Data:

Overall length:	290 mm
Drive:	19 mm
Max. load:	20 t.

KL-0039-2030 Pull Spindle M20

Technical Data:

Overall length:	420 mm
Drive:	19 mm
Max. charge:	20 t

KL-0040-3009 Clamping Nut M20

Technical Data:

Overall length:	50 mm
Drive:	30 mm

KL-0039-1011 Retainer Adaptor for mechanical spindle

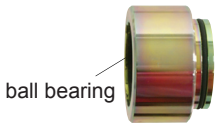

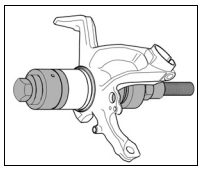

This tool is necessary to retain the various **KL-0039-..** or **KL-0043-..** press/support sleeves if these are to be inserted by using the mechanical drive.
The built-in ball bearing ensures accurate and professional working, even under intensive load.

KL-0039-1002 Retainer Adaptor for clamping nut and pressure spindle with O-ring

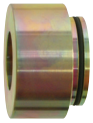

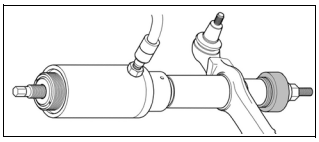

This adaptor is designed to retain the various press-/support sleeves of the **KL-0039-.. or KL-0043-..Series** .
Retaining Ø for clamping nut or pressure spindle: 20 mm

© 2011 KLANN-Spezial-Werkzeugbau-GmbH, Germany

Hydraulic-Cylinder 17 t — KL-0040-2500

Due to its special design as a tubular piston cylinder and in conjunction with various spindles, the hydraulic cylinder **KL-0040-2500** is suitable for pulling and pushing.

Application:
In conjunction with various KLANN tools, the hydraulic-cylinder **KL-0040-2500** can be used for the removal and replacement of drive shafts, wheel hubs, wheel bearings, silentblocs and suspension ball joints.

Note:
A hydraulic pump is required to drive the hydraulic cylinder **KL-0040-2500**.
For accessories such as coupling, hydraulic pump, dial gauge etc., please refer to chapter 4.

Technical Data:

Maximum admissable force:	170 kN (17 t)
Maximum stroke:	45 mm
Maximum oil pressure:	700 bar
Maximum volume of oil:	122 cm³
Piston area:	27 cm²
Thread in tubular piston:	M20
Retaining thread (pressure side):	2 ¼"-14 UNS
Retaining thread (pulling side):	M42×2
Cylinder outer diameter:	80 mm
Cylinder overall length (piston retracted):	202 mm
Cylinder overall length (piston extended):	247 mm
Hydraulic fluid connection thread:	3/8"NPT
Weight:	5.2 kg

Retainer Adaptor for hydr. cyl. with O-ring — KL-0039-1003

This tool is necessary to retain the various **KL-0039-..** or **KL-0043-..** press-/support sleeves if these are to be inserted by using the hydraulic cylinder **KL-0040-2500**. (Thread: M42x2)

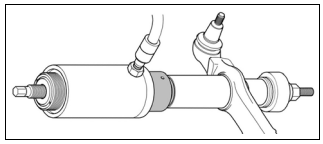

Retainer Adaptor for clamping nut and pressure spindle with O-ring — KL-0039-1002

This adaptor is designed to retain the various press-/support sleeves of the **KL-0039-.. or KL-0043-..Series** .
Retaining Ø for clamping nut or pressure spindle: 20 mm

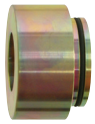

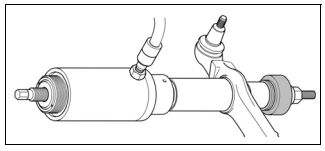

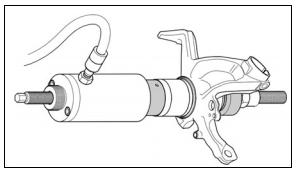

Pull Spindle M20 with clamping nut — KL-0039-1920

Technical Data:

Overall length:	590 mm
Working travel:	390 mm
Load max.:	20 t.

Scope of Delivery:
KL-0039-1920 Pull Spindle M20 with clamping nut

Part No.	Description	Quantity
KL-0039-1920-1	Pull Spindle M20	1
KL-0040-3009	Clamping Nut M20	1

Pressure Spindle M20x350 with O-ring — KL-0039-1930

Technical Data:

Pin-Ø:	20 mm
Overall length:	350 mm
Load max:	20 t.

Scope of Delivery:
KL-0039-1930 Pressure spindle M20x350 with O-ring

Part No.	Description	Quantity
KL-0039-1930-1	Pressure spindle M20x350 without O-ring	1
KL-0159-1223	O-ring Ø15 x 2	1

© 2011 KLANN-Spezial-Werkzeugbau-GmbH, Germany

KL-0039-1401 Bearing Cover

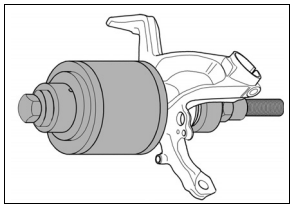

This tool enables centred power transmission from drive to housing.

KL-0039-1402 Housing

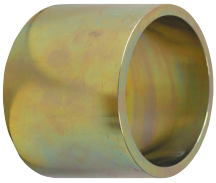

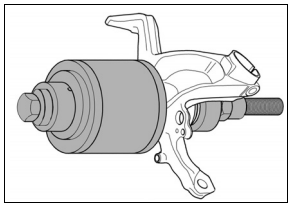

Suitable for bearing Ø up to 90 mm.

KL-0039-... Centring Ring Ø70 mm

These rings are necessary to support the wheel bearing tool housing on the wheel bearing housing.

KL-0039-1413	Centring Ring Ø70 mm
KL-0039-1414	Centring Ring Ø75 mm
KL-0039-1415	Centring Ring Ø80 mm

KL-0039-807 A Support Ring Set

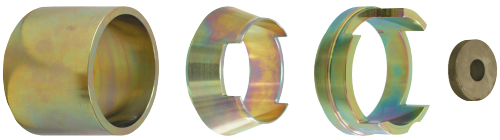

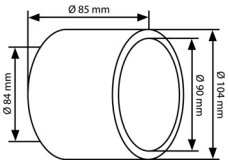

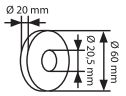

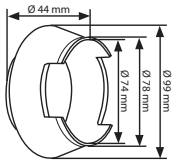

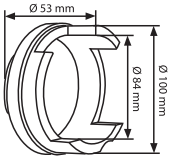

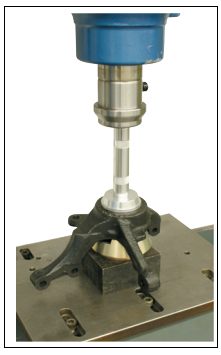

Universally suitable.

Designed to support the wheel bearing housing when removing the wheel bearing by means of a hydraulic press.

Set consists of:

KL-0039-1402 Housing:
Outer Ø: 104 mm
Inner Ø:84 mm / 90 mm
Height:85 mm

KL-0039-1504 Adaptor ring conical:
Outer Ø:99 mm
Inner Ø:74 mm
Height:44 mm

KL-0039-1505 Adaptor ring cylindric:
Outer Ø: 104 mm
Inner Ø:84 mm
Height:53 mm

KL-0039-1506 Centring ring:
Outer Ø: 60 mm
Inner Ø:20.5 mm
Height:20 mm

© 2011 KLANN-Spezial-Werkzeugbau-GmbH, Germany

Adaptor Ring (conical) KL-0039-1503

This ring is required for the accurate support of the wheel bearing tool housing on the wheel bearing housing if a standard support via the centring rings is not possible, e.g. on French vehicles where the wheel bearing has to be extracted inwards.

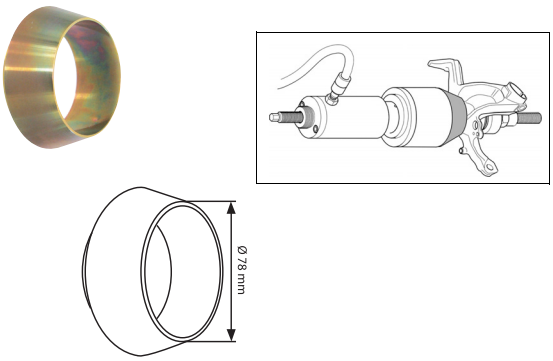

Adaptor Ring (conical) KL-0039-1504

This ring is required for the accurate support of the wheel bearing tool housing on the wheel bearing housing if a standard support via the centring rings is not possible, e.g. on French vehicles where the wheel bearing has to be extracted inwards.

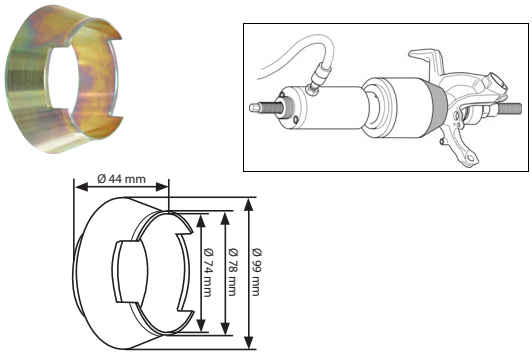

Adaptor Ring (cylindric) KL-0039-1505

Used to ensure the accurate support of the wheel bearing tool housing on the wheel bearing housing if a standard support via the centring rings is not possible, e.g. on French vehicles where the wheel bearing has to be extracted inwards.

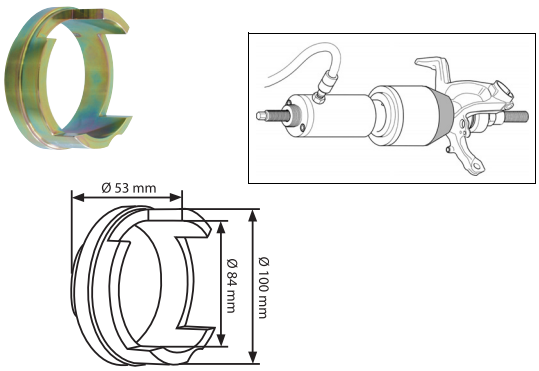

Adaptor Ring (cylindric) KL-0039-1509

Suitable for Peugeot 407 / Citroen C5 Adaptor ring.

Required for the accurate support of the wheel bearing tool housing on the wheel bearing housing, if a standard support via the centring rings is not possible, e.g. on French vehicles where the wheel bearing has to be extracted inwar

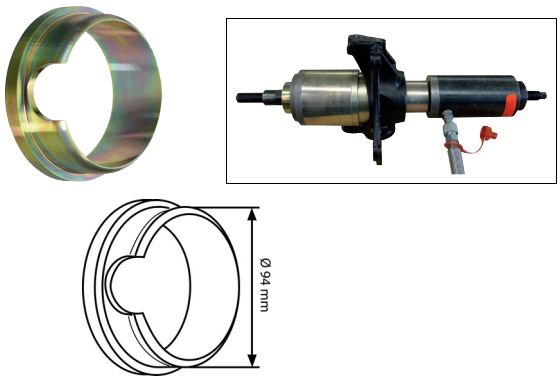

KL-0039-120 Set of Pressure Rings Ø54-90 mm

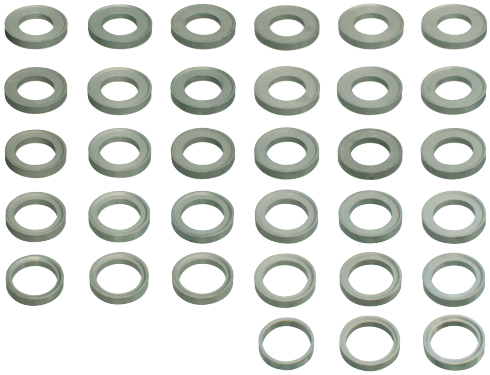

For accurate pressure force transmission on the outer bearing race or inner bearing race.

Note:
The special design of the press pieces enables a safe and accurate centring and alignment when changing the wheel bearing. It ensures that when removing and mounting the wheel bearing there will only be a pressure on the outer bearing race, and that when mounting the wheel hub there will only be a pressure on the inner bearing race. This prevents damage to the new wheel bearing.
The combination of centring rings and pressure rings creates press pieces which can be adapted accurately to the bearing Ø.

Scope of Delivery:
KL-0039-120 Set of Pressure Rings Ø 54 - 90 mm

Part No.	Description	Part No.	Description
KL-0039-1254	Pressure ring Ø54 mm	KL-0039-1275	Pressure ring Ø75 mm
KL-0039-1260	Pressure ring Ø60 mm	KL-0039-1276	Pressure ring Ø76 mm
KL-0039-1261	Pressure ring Ø61 mm	KL-0039-1277	Pressure ring Ø77 mm
KL-0039-1262	Pressure ring Ø62 mm	KL-0039-1278	Pressure ring Ø78 mm
KL-0039-1263	Pressure ring Ø63 mm	KL-0039-1279	Pressure ring Ø79 mm
KL-0039-1264	Pressure ring Ø64 mm	KL-0039-1280	Pressure ring Ø80 mm
KL-0039-1265	Pressure ring Ø65 mm	KL-0039-1281	Pressure ring Ø81 mm
KL-0039-1266	Pressure ring Ø66 mm	KL-0039-1282	Pressure ring Ø82 mm
KL-0039-1267	Pressure ring Ø67 mm	KL-0039-1283	Pressure ring Ø83 mm
KL-0039-1268	Pressure ring Ø68 mm	KL-0039-1284	Pressure ring Ø84 mm
KL-0039-1269	Pressure ring Ø69 mm	KL-0039-1285	Pressure ring Ø85 mm
KL-0039-1270	Pressure ring Ø70 mm	KL-0039-1286	Pressure ring Ø86 mm
KL-0039-1271	Pressure ring Ø71 mm	KL-0039-1287	Pressure ring Ø87 mm
KL-0039-1272	Pressure ring Ø72 mm	KL-0039-1288	Pressure ring Ø88 mm
KL-0039-1273	Pressure ring Ø73 mm	KL-0039-1289	Pressure ring Ø89 mm
KL-0039-1274	Pressure ring Ø74 mm	KL-0039-1290	Pressure ring Ø90 mm

KL-0039-130 Set of Centring Rings Ø 25 - 60 mm

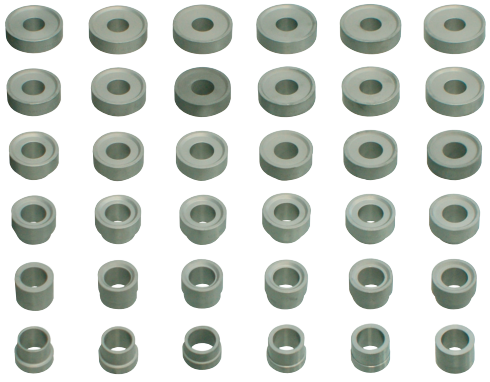

The centring rings ensure the exact guiding of the wheel bearing during the removal and installation process.

Note:
Complementing the **KL-0039-.. series** with press/support sleeves, pressure spindles and pressure frames creates a tool set which is almost universal in its field of application.

Scope of Delivery:
KL-0039-130 Set of Centring Rings Ø 25 - 60 mm

Part No.	Description	Part No.	Description
KL-0039-1325	Centring ring Ø25 mm	KL-0039-1343	Centring ring Ø43 mm
KL-0039-1326	Centring ring Ø26 mm	KL-0039-1344	Centring ring Ø44 mm
KL-0039-1327	Centring ring Ø27 mm	KL-0039-1345	Centring ring Ø45 mm
KL-0039-1328	Centring ring Ø28 mm	KL-0039-1346	Centring ring Ø46 mm
KL-0039-1329	Centring ring Ø29 mm	KL-0039-1347	Centring ring Ø47 mm
KL-0039-1330	Centring ring Ø30 mm	KL-0039-1348	Centring ring Ø48 mm
KL-0039-1331	Centring ring Ø31 mm	KL-0039-1349	Centring ring Ø49 mm
KL-0039-1332	Centring ring Ø32 mm	KL-0039-1350	Centring ring Ø50 mm
KL-0039-1333	Centring ring Ø33 mm	KL-0039-1351	Centring ring Ø51 mm
KL-0039-1334	Centring ring Ø34 mm	KL-0039-1352	Centring ring Ø52 mm
KL-0039-1335	Centring ring Ø35 mm	KL-0039-1353	Centring ring Ø53 mm
KL-0039-1336	Centring ring Ø36 mm	KL-0039-1354	Centring ring Ø54 mm
KL-0039-1337	Centring ring Ø37 mm	KL-0039-1355	Centring ring Ø55 mm
KL-0039-1338	Centring ring Ø38 mm	KL-0039-1356	Centring ring Ø56 mm
KL-0039-1339	Centring ring Ø39 mm	KL-0039-1357	Centring ring Ø57 mm
KL-0039-1340	Centring ring Ø40 mm	KL-0039-1358	Centring ring Ø58 mm
KL-0039-1341	Centring ring Ø41 mm	KL-0039-1359	Centring ring Ø59 mm
KL-0039-1342	Centring ring Ø42 mm	KL-0039-1360	Centring ring Ø60 mm

© 2011 KLANN-Spezial-Werkzeugbau-GmbH, Germany

KL-0039-0110 K Wheel Bearing Tool Set (with mechanical drive)

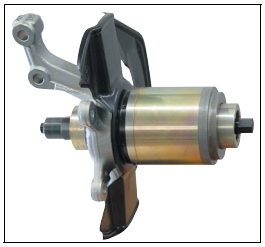

Suitable for VW-Audi, BMW, Ford, Seat, Skoda, Opel/Vauxhall, etc.

For the quick, safe and professional removal and replacement of wheel bearings.
The special design of the press pieces enables safe and accurate centring and alignment when changing wheel bearings. It ensures that when removing and mounting the wheel bearing there will only be a pressure on the outer bearing race, and that when mounting the wheel hub there will only be a pressure on the inner bearing race. This prevents damage to the new wheel bearing.
The combination of centring rings and pressure rings creates press pieces which can be adjusted accurately to the bearing-Ø.
Optionally a hydraulic 17t drive can be used if the wheel bearings are heavily corroded or seized in place.
Complementing this tool set with other parts of the **KL-0039 .. Series**, such as centring and pressure rings or press-/support sleeves, makes this wheel bearing tool almost universal in its field of application. It can, therefore, also be used for changing suspension ball joints or silentblocs.

Scope of Delivery: KL-0039-0110 K Wheel Bearing Tool Set

Part No.	Description	Qty.
KL-0039-0110	**Wheel Bearing Tool Set (with mechanical drive)**	**1**
KL-0039-0119	Plastic storage case	1

Scope of Delivery: KL-0039-0110 Wheel Bearing Tool Set

Part No.	Description	Qty.
KL-0039-140	Housing set	1
KL-0039-0101	Pressure/Centring ring set 16 pieces	1
KL-0039-1011	Retainer adaptor for mechanical spindle	1
KL-0039-1002	Retainer adaptor	1
KL-0040-3008	Spindle	1
KL-0040-3009	Clamping nut	1

KL-0039-0100 Wheel Bearing Tool Set without hydr. cylinder

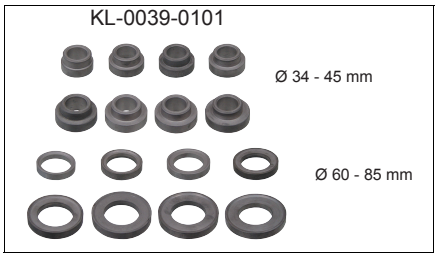

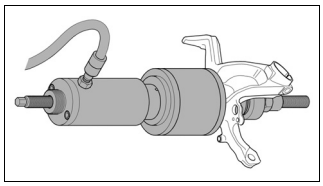

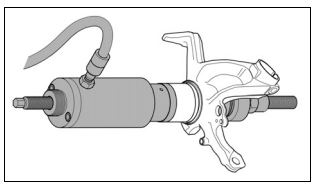

Suitable for VW-Audi, BMW, Ford, Seat, Skoda, Opel/Vauxhall, etc.

For the quick, accurate and safe removal and replacement of wheel bearings. Even very seized or corroded wheel bearings can easily be removed with the tool set **KL-0039-0100** that is used in conjunction with the hydraulic cylinder **KL-0040-2500**.
The special design of the press pieces enables safe and accurate centring and alignment when changing wheel bearings. It ensures that when removing and mounting the wheel bearing there will only be a pressure on the outer bearing race, and that when mounting the wheel hub there will only be a pressure on the inner bearing race. This prevents damage to the new wheel bearing.
The combination of centring rings and pressure rings creates press pieces which can accurately be adjusted to the bearing-Ø.
Complementing this tool set with other parts of the **KL-0039-.. Series**, such as centring and pressure rings or press-/support sleeves, makes this wheel bearing tool almost universal in its field of application. It can, therefore, also be used for changing suspension ball joints or silentblocs.

Scope of Delivery: KL-0039-0100 Wheel Bearing Tool Set without hydr. cyl.

Part No.	Description	Qty.
KL-0039-101	Drive set without hydraulic cylinder	1
KL-0039-0101	Pressure/Centring ring set 16 pieces	1

Scope of Delivery: KL-0039-101 Drive set without hydraulic cylinder

Part No.	Description	Qty.
KL-0039-1002	Retainer adaptor for clamping nut M20 with O-ring	1
KL-0039-1003	Retainer adaptor for hydraulic cylinder with O-ring	1
KL-0039-1920	Pull spindle M20 with clamping nut	1
KL-0039-140	Housing set	1

© 2011 KLANN-Spezial-Werkzeugbau-GmbH, Germany

Storage Container with Drive Parts — KL-4999-20

The storage container **KL-4999-20** allows a clear and easy way of working with the wheel bearing / silentbloc tools of the KL-0039-.. Series.

The drive parts included in this kit are used in conjunction with the tools of the **KL-0039-.. Series** for removing and installing bearings, bushings, joints etc.

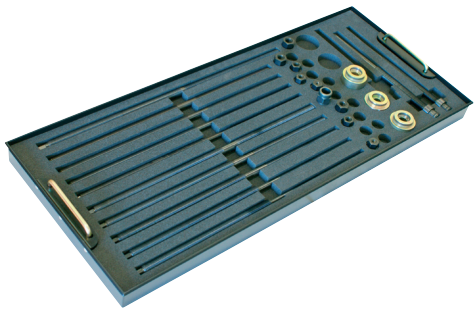

Scope of Delivery:
KL-4999-20 Storage Container with Drive Parts

Part No.	Description	Qty.
KL-4999-201	Storage Container for Drive Parts	1
KL-4999-202	Drive Part Set for Storage Container	1

Wheel Bearing Tool in a storage container — KL-4999-21

Universal use

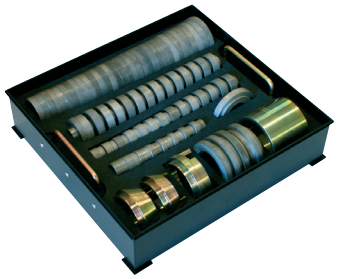

Scope of Delivery:
KL-4999-21 Wheel Bearing Tool in a storage container

Part No.	Description	Qty.
KL-4999-211	Storage Container for wheel bearing tool	1
KL-0039-1501	Centring ring	1
KL-0039-1503	Adaptor ring conical	1
KL-0039-1504	Adaptor ring conical	1
KL-0039-1505	Adaptor ring cylindrical	1
KL-0039-1413	Centring ring Ø70 mm	1
KL-0039-1414	Centring ring Ø75 mm	1
KL-0039-1415	Centring ring Ø80 mm	1
KL-0039-1401	Bearing cover	1
KL-0039-1402	Housing	1
KL-0039-130	Set of Centring Rings Ø25-60 mm	1
KL-0039-120	Set of Pressure Rings Ø54-90 mm	1

Wheel Bearing Tool Set for VW / Audi without drive — KL-0039-812

Suitable for VW-Audi e.g. A3 (8L), Audi A4 (B5), A4 Quattro (B6) rear axle, A6 (4A, 4B), A8 (4D, 4E), TT (8N, 8J); VW Polo (6N), Golf (II, III, IV), Passat, Sharan, T4.

For the quick, safe and professional removal and replacement of wheel bearings.
The easy complementing of this tool set with other parts of the **KL-0039-.. Series**, makes this wheel bearing tool almost universal in its field of application.
To drive this wheel bearing tool either the mechanical or the hydraulic drive set is required.

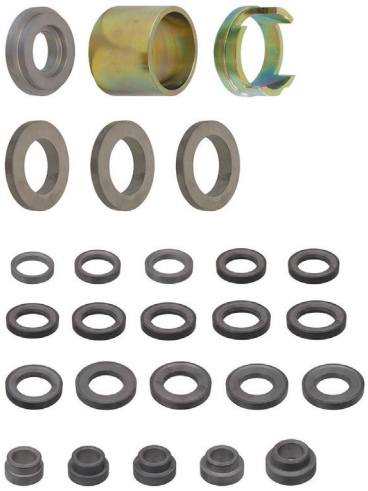

Scope of Delivery:
KL-0039-812 Wheel bearing tool set for VW / Audi without drive

Part No.	Description	Qty.
KL-0039-1401	Bearing cover	1
KL-0039-1402	Housing	1
KL-0039-1413	Centring ring Ø70 mm	1
KL-0039-1414	Centring ring Ø75 mm	1
KL-0039-1415	Centring ring Ø80 mm	1
KL-0039-1265	Pressure ring Ø65 mm	1
KL-0039-1266	Pressure ring Ø66 mm	1
KL-0039-1267	Pressure ring Ø67 mm	1
KL-0039-1270	Pressure ring Ø70 mm	1
KL-0039-1272	Pressure ring Ø72 mm	1
KL-0039-1274	Pressure ring Ø74 mm	1
KL-0039-1275	Pressure ring Ø75 mm	1
KL-0039-1276	Pressure ring Ø76 mm	1
KL-0039-1278	Pressure ring Ø78 mm	1
KL-0039-1279	Pressure ring Ø79 mm	1
KL-0039-1280	Pressure ring Ø80 mm	1
KL-0039-1281	Pressure ring Ø81 mm	1
KL-0039-1282	Pressure ring Ø82 mm	1
KL-0039-1283	Pressure ring Ø83 mm	1
KL-0039-1285	Pressure ring Ø85 mm	1
KL-0039-1334	Centring ring Ø34 mm	1
KL-0039-1337	Centring ring Ø37 mm	1
KL-0039-1339	Centring ring Ø39 mm	1
KL-0039-1340	Centring ring Ø40 mm	1

© 2011 KLANN-Spezial-Werkzeugbau-GmbH, Germany

Wheel Bearing Tool Set for Mercedes without drive — KL-0039-811

Suitable for Mercedes e.g. 190 series (W201), A-Class (W168, W169), B-Class (W245), W124, C-Class (W202, W203), E-Class (W210), M-Class (W163, W164), S-Class (W140), V-Class (W639).

For the quick, safe and professional removal and replacement of wheel bearings.
The easy complementing of this tool set with other parts of the **KL-0039-.. Series**, makes this wheel bearing tool almost universal in its field of application.
To drive this wheel bearing tool either the mechanical or the hydraulic drive set is required.

Scope of Delivery: KL-0039-811 Wheel bearing tool set without drive

Part No.	Description	Qty.
KL-0039-1401	Bearing cover	1
KL-0039-1402	Housing	1
KL-0039-1403	Housing	1
KL-0039-1415	Centring ring Ø80	1
KL-0039-1266	Pressure ring Ø66	1
KL-0039-1270	Pressure ring Ø70	1
KL-0039-1273	Pressure ring Ø73	1
KL-0039-1275	Pressure ring Ø75	1
KL-0039-1279	Pressure ring Ø79	1
KL-0039-1283	Pressure ring Ø83	1
KL-0039-1284	Pressure ring Ø84	1
KL-0039-1285	Pressure ring Ø85	1
KL-0039-1288	Pressure ring Ø88	1
KL-0039-1342	Centring ring Ø42	1
KL-0039-1345	Centring ring Ø45	1
KL-0039-1349	Centring ring Ø49	1
KL-0039-1350	Centring ring Ø50	1
KL-0039-1501	Centring ring	1
KL-0039-1502	Pressure ring Ø93	1
KL-0039-1506	Centring ring Ø60	1

Wheel bearing tool set MB W639 rear axle with hydr. cylinder — KL-0039-210

Suitable for Mercedes Benz Vito / Viano (W639) rear axle. (bearing-Ø outer 92 mm / inner 50 mm)

For the quick, safe and professional removal and replacement of wheel bearings as well as for the replacement of wheel hubs on the rear axle wishbone without having to remove the wishbone from the vehicle.
The special design of the press pieces enables safe and accurate centring and alignment when changing wheel bearings. It ensures that when removing and mounting the wheel bearing, there will only be a pressure on the outer bearing race, and that when mounting the wheel hub, there will only be a pressure on the inner bearing race. This prevents damage to the new wheel bearing.
The combination of centring rings and pressure rings creates press pieces which can be adjusted accurately to the bearing-Ø.
Complementing this tool set with other parts of the **KL-0039-.. series**, such as e.g. centring- and pressure rings or press/support sleeves, makes this wheel bearing tool set almost universal in its field of application. It can, therefore, also be used for changing suspension ball joints or silentblocs.

Scope of Delivery: KL-0039-210 Wheel bearing tool set with hydr. cylinder

Part No.	Description	Qty.
KL-0039-211	Wheel bearing tool set MB W639 rear axle without hydr. cylinder	1
KL-0040-2500	Hydraulic cylinder 17t	1

Scope of Delivery: KL-0039-211 Wheel bearing tool set without hydr. cyl.

Part No	Description	Qty.
KL-0039-1002	Retainer adaptor for clamping nut and pressure spindle with O-ring	1
KL-0039-1003	Retainer adaptor for hydraulic cylinder with O-ring	1
KL-0039-1920	Pull spindle M20, with clamping nut	1
KL-0039-213	Sleeve Set MB W639 rear axle	1

Scope of Delivery: KL-0039-213 Sleeve Set

Part No.	Description	Qty.
KL-0039-1270	Pressure ring Ø70 mm	1
KL-0039-1273	Pressure ring Ø73 mm	1
KL-0039-1350	Centring ring Ø50 mm	1
KL-0039-1403	Housing	1
KL-0039-1501	Centring ring	1
KL-0039-1502	Pressure ring Ø93 mm	1
KL-0039-1401	Bearing cover	1

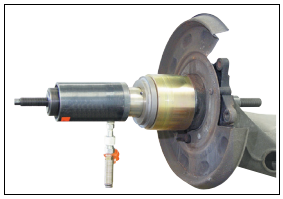

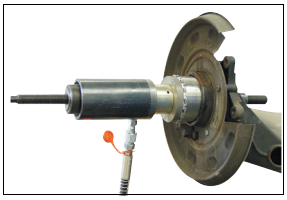

Spezial-Werkzeugbau GmbH

(de) **Wenn es darum geht, Reparaturarbeiten an Kraftfahrzeugen zu erleichtern und zu optimieren, kommen weltweit immer wieder die Spezialwerkzeuge von KLANN zum Einsatz.**

Wir entwickeln und fertigen seit über 30 Jahren innovative Spezialwerkzeuge für alle Fahrzeugtypen. Oberstes Ziel ist es, die Reparaturen sicherer, einfacher, schneller und damit kosten-günstiger zu machen.

Dafür entwickeln wir intensiv in der eigenen Versuchswerkstatt, um noch schneller auf die Marktanforderungen reagieren zu können. Wir produzieren mit modernster Technologie und schulen in unserer Versuchswerkstatt direkt am Fahrzeug.

Mehr Information?!

Weitere Informationen und Spezial-werkzeuge finden Sie in unserem Hauptkatalog oder im Internet unter:
www.klann-online.de

(en) **When it comes to facilitating and optimizing professional vehicle repair, KLANN's special tools are the tool of choice, worldwide.**

For more than 30 years, we have been developing and manufacturing innovative special tools for all types of vehicles.

It is our primary objective to make repairs safer, easier and faster and, thus, more economical.

To achieve this goal, we continuously design and develop special tools in our own fully equipped workshop. As a result, we are able to immediately respond to market needs and requirements.

As it has always been our aim to strive for consistent high-quality products we manufacture our tools with state-of-the-art technology and provide practical training directly on the vehicle in our training room.

More information?!

More information and special tools are available in our main catalogue or at
www.klann-online.de
www.klanntools.co.uk
www.klanngedore.com

(fr) **Quand il s'agit de simplifier et d'optimiser des réparations automobiles, ce sont les outils spéciaux KLANN qu'on utilise dans le monde entier.**

Nous fabriquons depuis plus de 30 ans des outils spéciaux innovateurs pour tous types de véhicule. Notre objectif principal est de rendre les réparations plus simples, plus sûres et plus rapides et, par conséquent, plus économiques.

Dans notre atelier expérimental, nous nous efforçons de pouvoir répondre rapidement aux exigences du marché. Nous appliquons les technologies de pointe à notre production et disposons d'une salle de formation pour l'utilisation pratique des outils sur le véhicule.

Plus d'informations?!
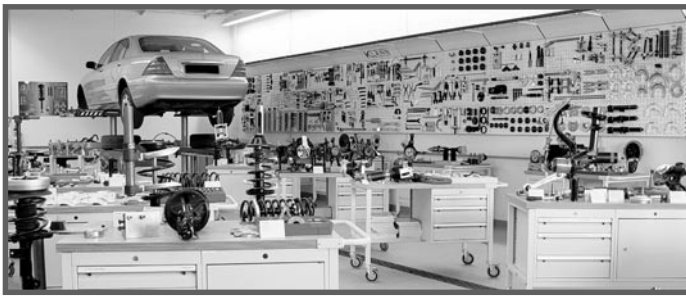
Vous trouverez plus d'informations sur les outils spéciaux dans notre catalogue principal ou sur internet sous:
www.klann-online.de
www.klann.fr