ORIGINAL SACHS SERVICE

Service Info

Assembly instructions

Clutches
Shock absorbers

Audi A4

1.6 l, 1.8 l,

1.8 l turbo quattro,

2.6 l, 2.8 l **11.94** ➟

The original Sachs components for each type are given in the current vehicle lists.

Instructions for removing the clutch

To enable the clutch to be removed, the gearbox flange must first of all be disconnected from the engine and the gearbox removed.

- Disconnect the battery earthing strip with the ignition switched off.
- Remove the engine encapsulation.
- Unscrew the left-hand and right-hand half shafts from the gearbox and lay them to one side.
- Remove the front section of the exhaust pipe together with the catalytic converter.

Vehicles with quattro drive system

- Mark the installation position of the prop shaft and then remove it.

Continue as follows (all vehicles)

- Remove the starter.
- Disconnect all electric leads from the gearbox and expose them.
- Remove the selector-rod fastening screw from the gearbox, remove the selector joint from the selector rod and unscrew the push rod.

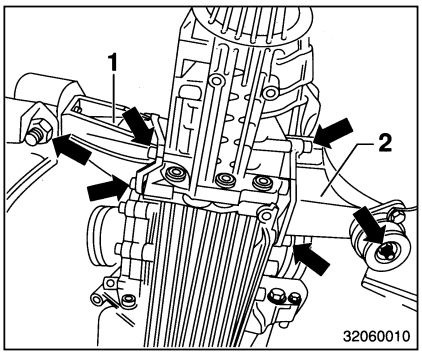

Figure 1 **Right-hand and left-hand gearbox supports** 1 Left-hand gearbox support - 2 Right-hand gearbox support

- Remove right-hand gearbox support (Figure 1/2).
- Remove left-hand gearbox support (Figure 1/1) and mount.
- Unscrew the bolts connecting the engine and gearbox.
- Push the geabox off the fitting sleeves and lower it carefully by 15 cm using a suitable engine/gearbox jack.
- Remove clutch slave cylinder together with line holder and attach to the body with the hydraulic lines connected.

Caution:
Do not operate the clutch with the slave cylinder removed.

- Lower the gearbox fully.

Please note:
When lowering the gearbox, ensure freedom of movement for the half shafts.

- Unscrew the fastening screws (Figure 2/7) from the clutch cover assembly (Figure 2/8), working uniformly and crosswise and remove the cover assembly together with the clutch disc (Figure 2/9).

Please note:
Before removing the clutch cover assembly, lock the flywheel with retaining device W2.

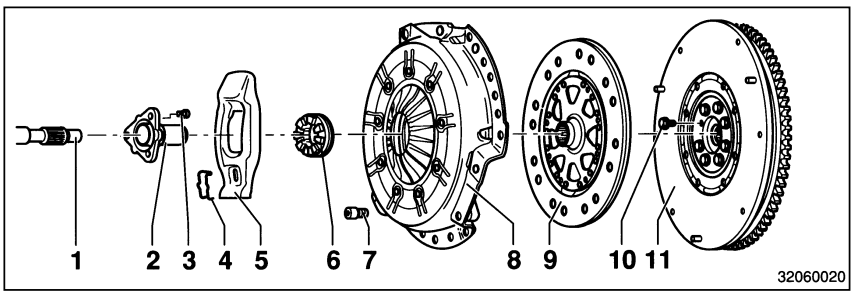

Figure 2 **Assembling and disassembling the clutch**
1 Central shaft - 2 Guide sleeve - 3 Fastening screw - 4 Retaining spring - 5 Release lever - 6 Release bearing - 7 Fastening screw - 8 Clutch cover assembly - 9 Clutch disc - 10 Fastening screw - 11 Flywheel.

Continued overleaf

Special tools: **Audi A4 1.6 l / 1.8 l / 1.8 l turbo quattro / 2.6 l / 2.8 l**

For changing the clutch		**For changing the shock absorbers**	
W1-	Universal clutch disc tester Order No.: 18 4200 080 550	W3-	Clamping device Order No.: 18 4200 081 530
W2-	Retaining device for flywheel Order No.: 18 4200 080 445	W4-	Universal spring compressing device Order No.: 11 4200 081 150

In the text, the special tools are referred to as (W1-4).

Assembly and installation

Assembly and installation is the reverse of disassembly. Please note the following points:

- Apply Sachs clutch grease sparingly to the sliding surfaces of the clutch release bearing (Figure 2/6) and the splines of the central shaft (Figure 2/1).

  Important:

  Replace all self-locking nuts, screws and bolts with new ones.

  Clutch grease must not be allowed to get onto the clutch facings.
- Check the cluch disc for lateral run-out with the measuring device in W1.
- Move the clutch disc backwards and forwards on the central shaft until the hub moves freely on the shaft.
- Remove excess grease.
- Tighten the fastening screws for the clutch cover assembly crosswise and uniformly.

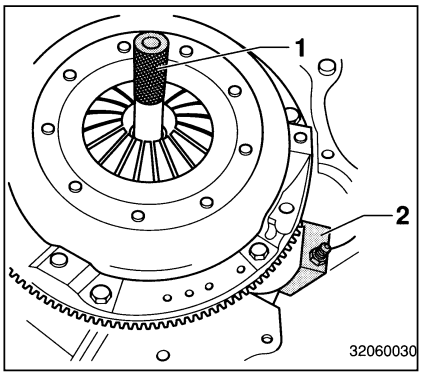

Figure 3 **Centring mandrel and countersupport**
1 Centring mandrel from W1 - 2 Retaining device W2

Please note:

To tighten the clutch cover assembly, lock the flywheel (Figure 2/11) with the retaining device W2 (Figure 3/2).

- To centre the clutch disc, use the centring mandrel (Figure 3/1) from W1.
- When mounting the slave cylinder on the gearbox, apply pressure to it until the fastening screw can be inserted.

Tightening torques	(Nm)
M8	25
M10	45
M12	65
Guide tube on gearbox	35
Flywheel on crankshaft	60 +90º

Shock absorbers

Front suspension

To replace the strut insert, you must first remove the strut.

Removing the suspension strut

- Place the vehicle on a lift that leaves the wheels free and remove the wheels.
- Remove the rubber grommets in the radiator tank and unscrew the strut nut.
- Pull the lead of the ABS speed sensor out of the holder on the brake caliper.
- Unscrew nut (Figure 4/1), remove hexagon screw and pull both wishbones upwards (Figure 4/2).
- Tilt the swivel bearing out in the direction of the arrow.

  Please note:

  Do not unscrew bolts (Figure 4/3 + 4).

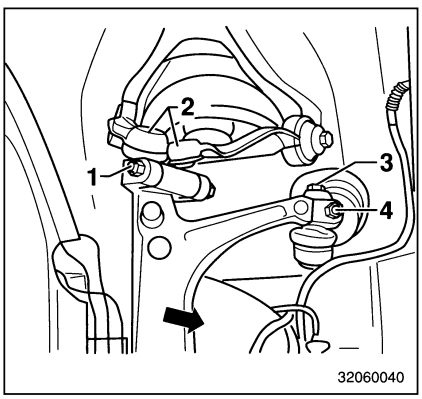

Figure 4 **Front suspension strut arm**
1 Hexagon nut - 2 Wishbones - 3 Fastening bolt - 4 Fastening bolt

Otherwise you will have to check the axle geometry.

- Unscrew the bolt on the supporting mount (at bottom of suspension strut) and remove the strut (Figure 5/11).

  Please note:

  From chassis number -8DTA321912- (inclusive), stop plates have been used as end stops on vehicles with sports and off-road suspension. These must not be removed.
- Clamp the strut in the clamping device and compress the coil spring (Figure 5/5) with spring compressing device W4 until the upper spring seat is free (Figure 5/4).

  Caution:

  When compressing the coil spring, make sure that the compressing device engages properly in the coils.
- Unscrew the self-locking nut (Figure 5/1) from the piston rod using an Allen key to prevent movement.
- Disassemble the components of the suspension strut.
- Release the bottom spring seat (Figure 5/10) with plastic-headed hammer and remove it.

  Please note:

  Note the installation position of the bottom spring seat.

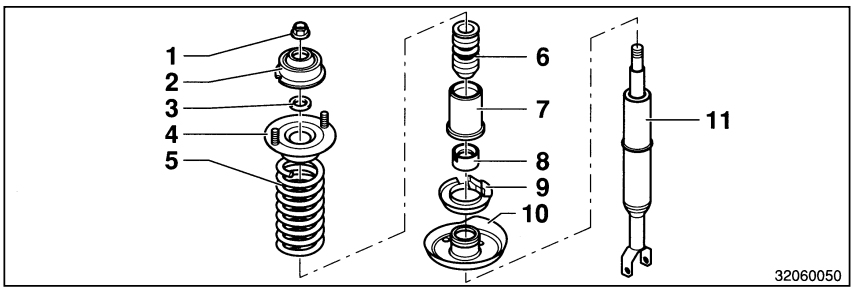

Figure 5 **Front suspension strut**
1 Self-locking hexagon nut - 2 Shock absorber mount - 3 Washer - 4 Upper spring seat - 5 Coil spring - 6 Additional spring - 7 Protective sleeve - 8 Protective cap - 9 Bottom spring support - 10 Bottom spring seat - 11 Suspension strut

Assembly and installation of the suspension strut

Assembly and installation of the strut is the reverse of removal.

- Place the bottom spring seat on the shock absorber.

  Please note:

  Turn the hole in the spring seat through 90° to the screwing axis of the shock absorber.
- Place all the components on the strut and tighten the self-locking hexagon nut.

  Please note:

  Note the installation position of the upper spring seat.
- Release the coil spring. Make sure that the ends of the spring are located correctly in the spring seats.

  Important:

  Replace all self-locking nuts with new ones.

Tightening torques	(Nm)
Hexagon screw, piston rod	50
Suspension strut, bottom, on support arm	90
Fastening nut, wishbone	40
Fastening nuts, strut, top	20

Wheel alignment settings

Apply to all vehicles

Front wheels

	Standard suspension (1BA)		Sport suspension (1BE)	
	Front-wheel drive	Quattro	Front-wheel drive	Quattro
Camber	-25' ±25'	-25' ±25'	-40' ±25'	-40' ±25'
Max. camber difference between the two sides	30'	30'	30'	30
Toe (with vehicle empty)	+10' ±2'	+10' ±2'	+10' ±2'	+10' ±2'
Toe (control value with vehicle empty)	+10' ±5'	+10' ±5'	+10' ±5'	+10' ±5'
Toe constant (value set)	+12' ±2'	+12' ±2'	+12' ±2'	+12' ±2'
Toe constant (control value)	+12' ±5'	+12' ±5'	+12' ±5'	+12' ±5'
Toe difference angle at 20 degrees	-1º 20' ±30'	-1º 20' ±30'	-1º 20' ±30'	-1º 20' ±30'

Rear suspension

Removal of the rear strut on vehicles with front-wheel drive

- Place the vehicle on a lift that leaves the wheels free.
- Remove the wheel.
- Unscrew the strut (Figure 6/1) from the axle body.
- Remove the side of the seat-back cover or remove the seat backs, and then remove the upper fastening screws.
- Turn the strut until the retaining projections are over the cut-outs.
- Pull the strut downwards out of the holder.

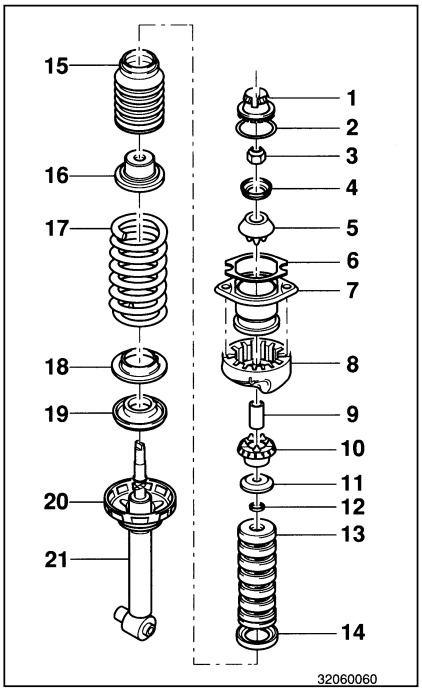

Figure 6 **Rear suspension strut (front-wheel drive)**
1 Cap - 2 O-ring - 3 Self-locking hexagon nut - 4 Spring washer - 5 Support ring - 6 Gasket - 7 Upper spring seat - 8 Upper spring support - 9 Spacer tube - 10 Support ring - 11 Washer - 12 Ring - 13 Additional spring - 14 Locating ring - 15 Gaiter - 16 Cap - 17 Spring - 18 Support - 19 Bottom spring support - 20 Bottom spring seat - 21 Suspension strut

Removal of the rear strut on vehicles with the quattro drive system

- Place the vehicle on a lift that leaves the wheels free.
- Unscrew the screwed joint at the bottom of the axle link.
- Unscrew the wheel bearing housing from the top of the axle link.
- Remove the screws connecting the adapter (Figure 7/1) to the wheel arch (from the inside); push the wheel bearing housing downwards and remove the strut (Figure 7/6) and axle link.

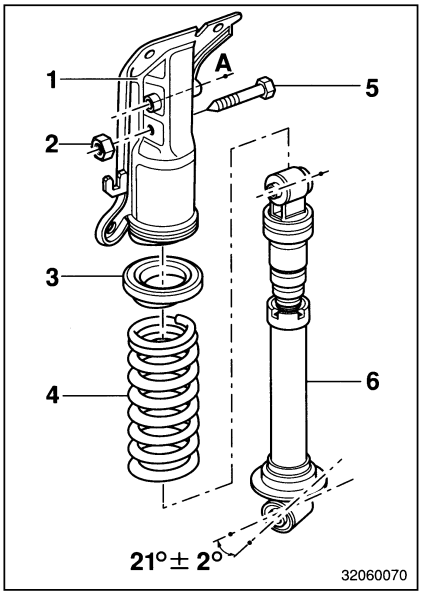

Figure 7 **Rear suspension strut (quattro drive)**
1 Adapter - 2 Self-locking hexagon nut - 3 Damping ring - 4 Coil spring - 5 Hexagon screw - 6 Suspension strut

- Unscrew the shock absorber from the axle link and remove the axle link.

Continue as follows (all vehicles)

- Clamp the strut in the clamping device W3 and compress the coil spring with the spring compressing device W4 until the upper spring seat is free.

Caution:
When compressing the coil spring, make sure that the compressing device engages properly in the coils.

Vehicles with front-wheel drive

- Unscrew the self-locking hexagon nut (Figure 6/3) of the piston rod and remove the components.

Vehicles with quattro drive

- Unscrew the fastening nut (Figure 7/2) and re-move the screw (Figure 7/5).
- Remove the adapter (Figure 7/1) and damping ring (Figure 7/3).
- Remove the preloaded coil spring.

Assembly and installation of the suspension strut

Assembly and installation of the strut is the reverse of disassembly.

Important:
Replace all self-locking nuts, screws and bolts with new ones.
Use different struts to match the design of the suspension (given on the data carrier).

Please note:
Colour marking of the springs points downwards towards the spring seat.
Note the installation position of the strut and the spring seats when installing them.

Vehicles with front-wheel drive

- Place the components on the strut and tighten the self-locking hexagon nuts.

Please note:
Coat the O-ring with silicone grease.

Vehicles with quattro drive

- Place the components on the strut and screw the latter loosely to the adapter.
- Turn the adapter through 21° relative to the strut eye.

Continue as follows (all vehicles)

- Release the coil spring, making sure that the ends of the spring are located correctly in the spring seats.

Vehicles with quattro drive

- Screw the strut tightly to the adapter.

Tightening torques	(Nm)
Vehicles with front-wheel drive	
Hexagon nut, piston rod	25
Upper fastening screw	25
Suspension strut at bottom to axle link	50 + 90°
Vehicles with quattro drive	
Adapter to wheel arch	55
Axle link at top to the adapter	50 + 90°
Suspension strut to adapter	70 + 90°
Suspension strut at bottom to axle body	70 + 90°

Wheel alignment settings

Apply to all vehicles

Rear axle

	Standard suspension (1BA)		Sports suspension (1BE)	
	Front-wheel drive	quattro	Front-wheel	quattro
Camber	-1º 30' ±20'	40' ±30'	-1º 30' ±20'	40' ±30'
Max. difference in camber between the two sides	30'	30'	30'	30'
Total toe (at specified front-wheel camber)	+20' $^{+15'}/_{-10'}$		+20' ±15'/-10'	
Toe-in (at specified front-wheel camber)		+8' ±5'		+8' ±5'