Thule Rapid System Kit 1417

› Instructions

AUDI A3, 3-dr Hatchback, 03-12

AUDI A3 Sportback, 5-dr Hatchback, 04-12 / *06–

*North America

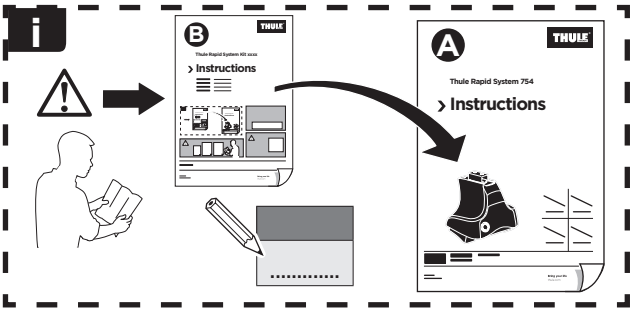

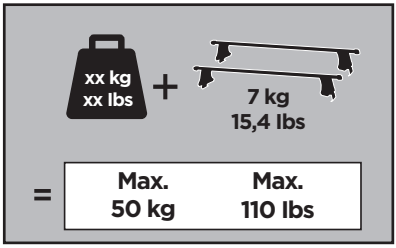

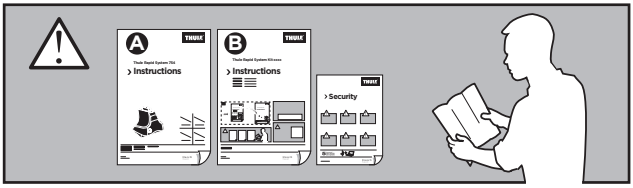

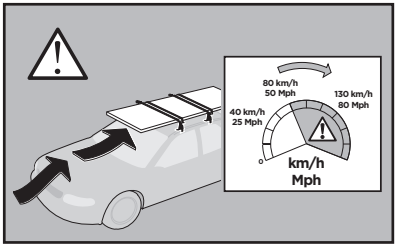

ISO 11154-E

141417

C.20150225

519-1417-04

Bring your life

thule.com

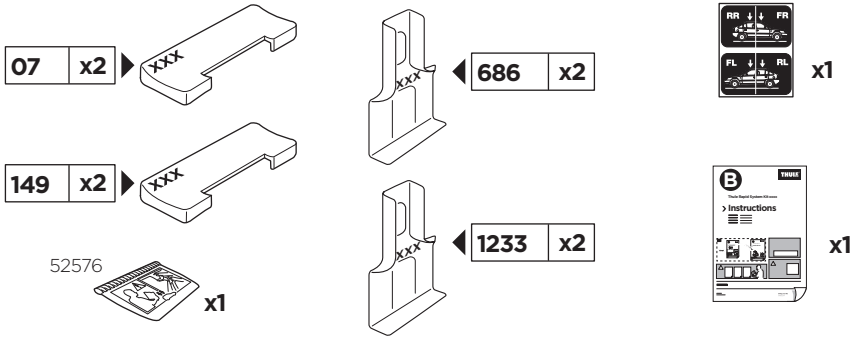

1

	X (scale)	X (mm)	X (inch)
AUDI A3, 3-dr Hatchback, 03-12	**36**	**1011**	**39 3/4**
AUDI A3 Sportback, 5-dr Hatchback, 04-12 / *06–	**36**	**1011**	**39 3/4**

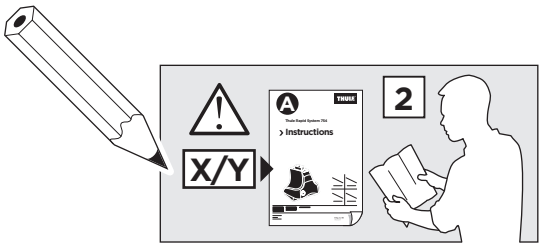

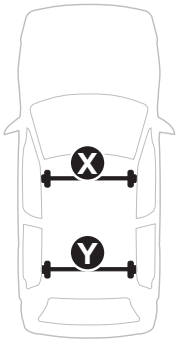

	Y (scale)	Y (mm)	Y (inch)
AUDI A3, 3-dr Hatchback, 03-12	**33**	**981**	**38 5/8**
AUDI A3 Sportback, 5-dr Hatchback, 04-12 / *06–	**33**	**981**	**38 5/8**

2

AUDI A3, 3-dr Hatchback, 03-12
AUDI A3 Sportback, 5-dr Hatchback, 04-12 / *06–

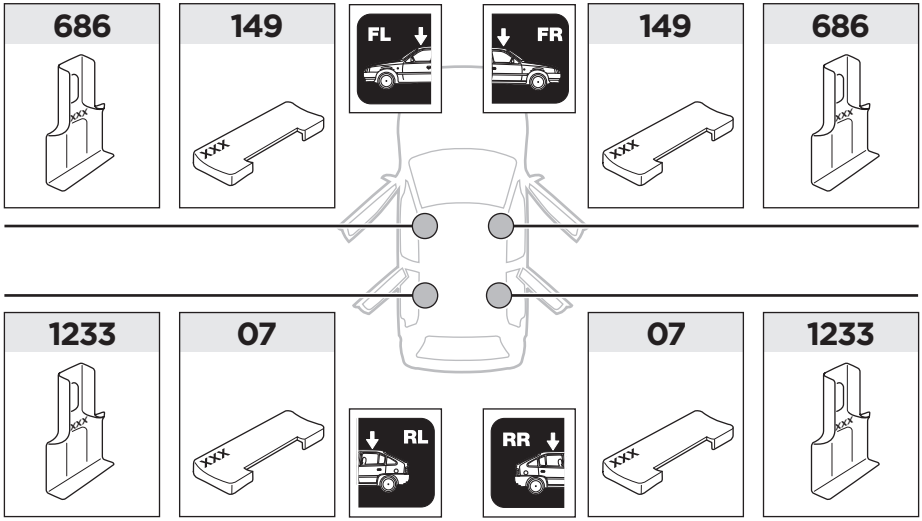

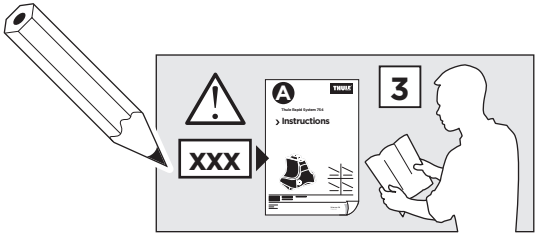

3

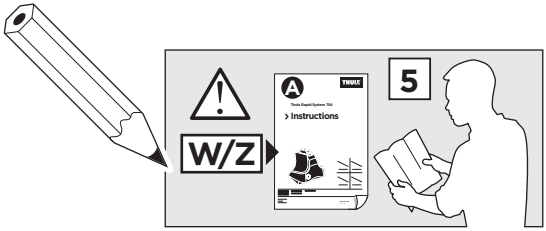

	W (mm)	Z (mm)	W (inch)	Z (inch)
AUDI A3, 3-dr Hatchback, 03-12	**260**	**700**	**10 1/4**	**27 1/2**
AUDI A3 Sportback, 5-dr Hatchback, 04-12 / *06–	**260**	**700**	**10 1/4**	**27 1/2**

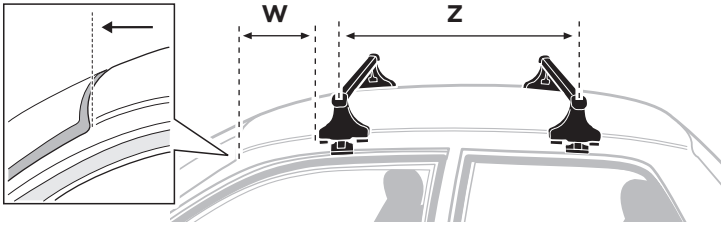

AUDI A3,
3-dr Hatchback, 03-12

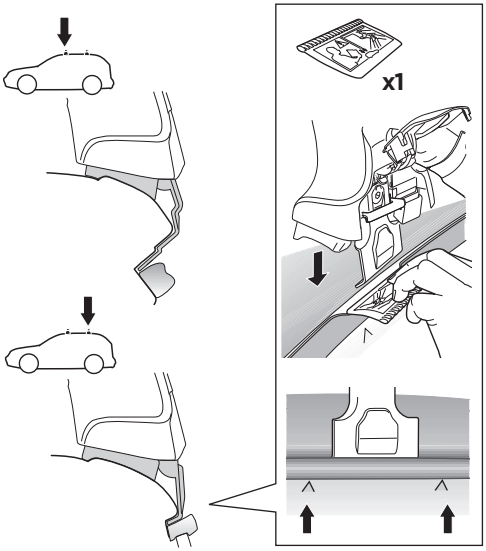

AUDI A3 Sportback,
5-dr Hatchback, 04-12 / *06–

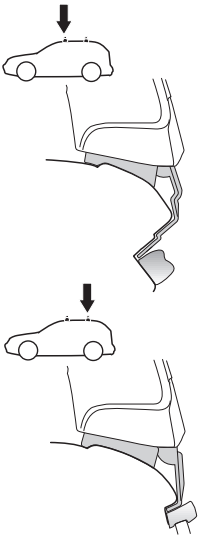

Thule Sweden AB, Box 69, 330 33 Hillerstorp, SWEDEN
Thule Inc., 42 Silvermine Road, Seymour, Connecticut 06483, USA
info@thule.com
Phone: 800-238-2388
www.thule.com

PART OF THULE GROUP
© Thule Group 2015. All rights reserved.