3PK806-790SF (Smart)

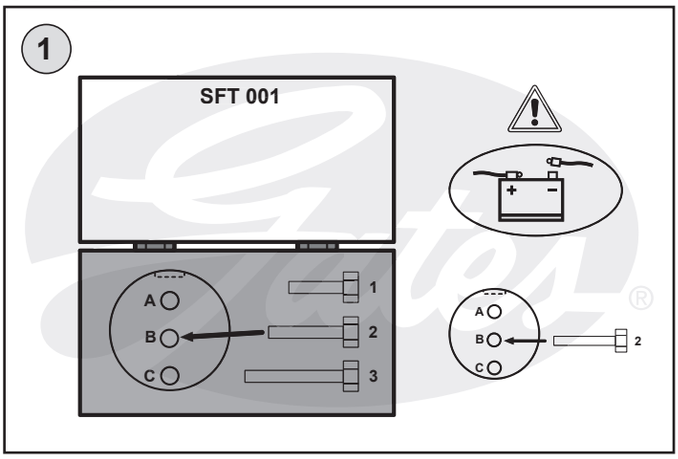

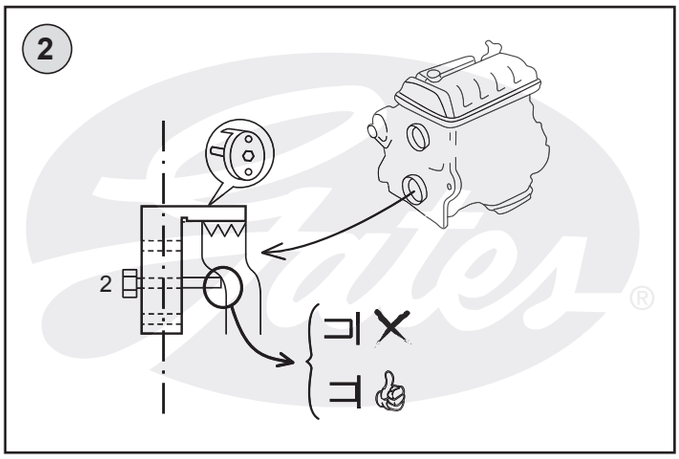

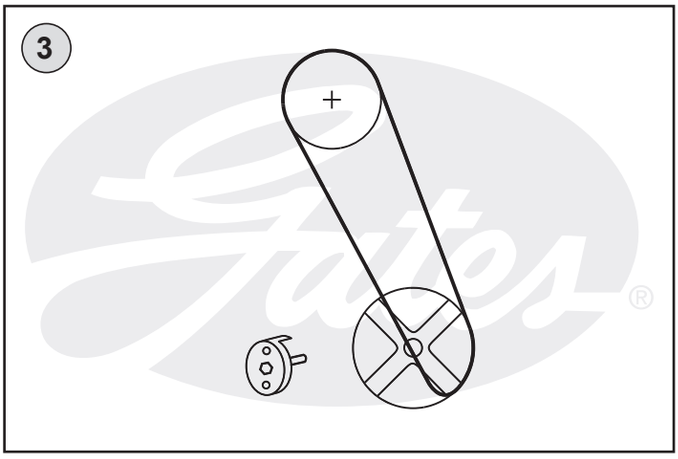

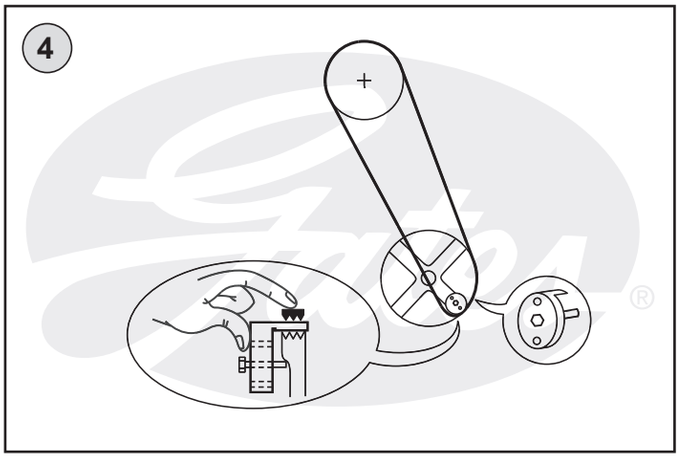

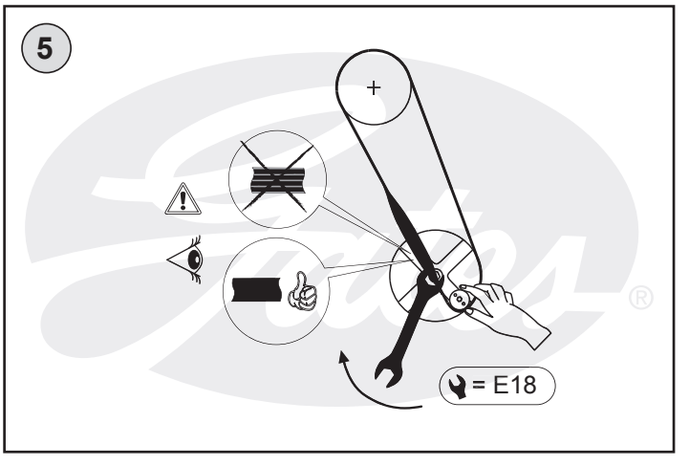

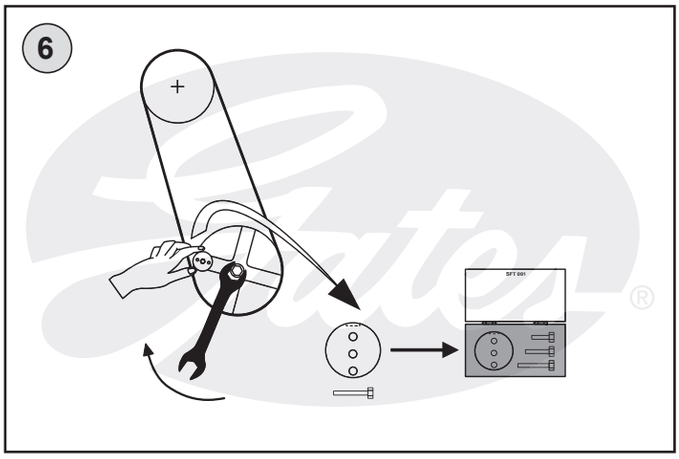

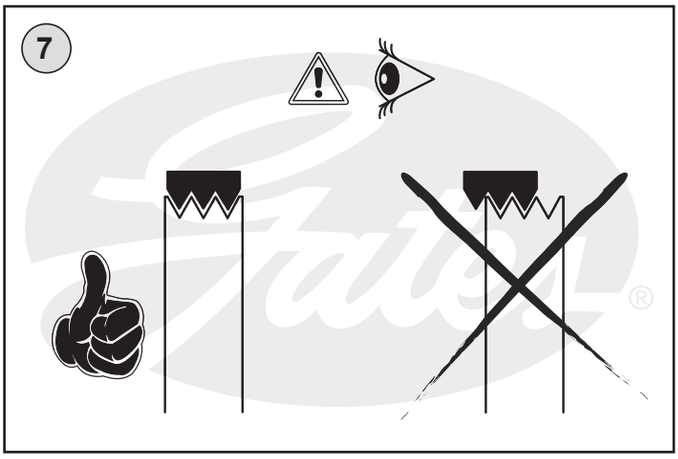

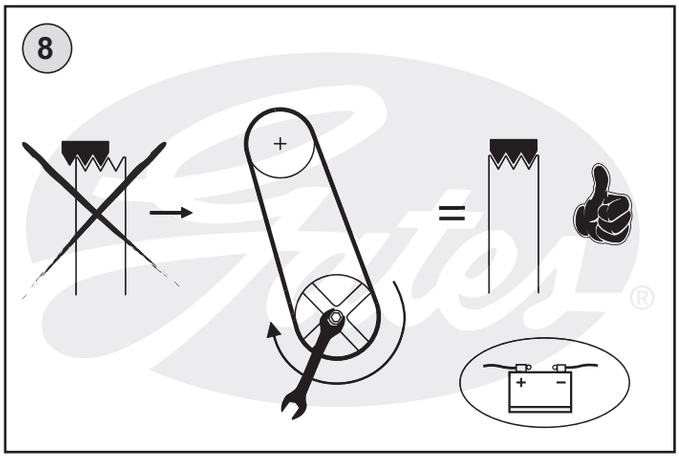

The manufacturers reserve the right to amend details where necessary.

© Gates Corporation 2009

Printed in Belgium - 10/09.